HALEY ALDRICH

www.haleyaldrich.com

REPORT ON
RESULTS OF PILE LOAD TESTS
PROPOSED RESIDENTIAL DEVELOPMENT
2065 WALTON AVENUE
BRONX, NEW YORK

by Haley & Aldrich of New York
Parsippany, New Jersey

for B & B Supportive Housing, LLC
New York, New York

File No. 40794-100
December 2015

Haley & Aldrich of New York
299 Cherry Hill Rd.
Suite 303
Parsippany, NJ 07054
973.263.3900

11 December 2015
File No. 40794-100

B & B Supportive Housing, LLC
418 Park Avenue South
18th Floor
New York, New York 10016

Attention: Alan Bell

Subject: Report on Results of Pile Load Tests
Proposed Residential Development
2065 Walton Avenue
Bronx, New York

Dear Mr. Bell:

This report presents the results of two static compression and one lateral load test performed on two STELCOR® drilled-in displacement micropiles at the 2065 Walton Avenue multi-family residential development in Bronx, New York. Procomm Systems, Inc. of Phillipsburg, New Jersey installed the piles, provided and set up the load test frame and instrumentation, and conducted the load testing. Haley & Aldrich of New York observed the installation of the test piles and documented the results of the load testing as summarized herein.

Background

The site location is shown on Figure 1, Project Locus, and the configuration of the proposed development is shown on Figure 2. The proposed development will consist of a single ten-story residential structure with a 5,135 square foot (sf) footprint that will be supported on STELCOR® SC1200-550476-16129-8 drilled-in displacement micropiles. These friction piles are designed to achieve compressive and tensile load resistance in the Alluvium, Glacial Deposits, and Decomposed Rock Strata present at the site. Static axial load testing was performed on two piles; a lateral load test was performed on one of the two.

Subsurface Soil and Bedrock Conditions

Haley & Aldrich conducted a subsurface exploration program between 10 and 12 March 2014. Logs of selected test borings performed in the vicinity of the tested piles are provided in Appendix A, and locations of tested piles are shown on Figure 2.

Site subsurface conditions typically consist of the following strata, progressing downward from ground surface:

- Fill
- Alluvium
- Glacial Deposits
- Decomposed Rock

Test Piles

Two STELCOR® SC1200-550476-16129-8 drilled-in displacement micropiles were installed at production pile locations, and six reaction piles were installed around each production pile to enable load testing. The piles consisted of a 10-ft lead section with a 9-in. diameter lateral displacement plate, a 12-in. diameter deformation structure, and a 16-in. diameter drive plate, and a 5.5-in. outer diameter, 0.476-in. thick circular steel casing (80 ksi yield strength) with a welded reverse auger flight for a net diameter of 8-in. Additional 10-ft sections of the steel casing with reverse auger were attached using two 1-in. diameter Grade 8 bolts at each connection. Refer to Appendix B for pile cut sheets.

Piles were drilled through or into the Alluvium, Glacial Deposits, and/or Decomposed Bedrock to a depth of 40 ft below the proposed pile cut-off (Pile No. 22) or until torque refusal was achieved (Pile No. 49) in accordance with the accepted Contractor submittals for pile installation. Grout was continuously pumped into the reverse augers during drilling. One-inch diameter PVC pipes were placed to the bottom of the pile, within the steel casing, before the grout set to function as sleeves for telltales in each test pile.

Test pile locations are indicated on Figure 2. Installation logs are provided in Appendix C. Results of grout breaks are provided in Appendix D.

Load Test Procedures

The static axial compression load tests, performed on Pile No. 22 from 27 to 29 November 2015 and on Pile No. 49 from 1 to 3 December 2015, were conducted in general accordance with ASTM D1143, "Standard Test Methods for Deep Foundations Under Static Axial Compressive Load," and the 2008 New York City Building Code (NYCBC). Procomm Systems, Inc. set up the load test apparatus, installed the telltales, and provided and operated the pump and jack. Details regarding static load test apparatus and instrumentation are provided in Appendix E.

The lateral load test, performed on 4 December 2015, was conducted in general accordance with ASTM D3966, "Standard Test Methods for Deep Foundations Under Lateral Load," and the 2008 NYCBC.

Load Test Results

Static axial compression load tests were successfully performed on the piles, as summarized below:

Description	Pile No. 22	Pile No. 49	2008 NYCBC Requirement
Date Installed	18 Nov. 2015	18 Nov. 2015	-
Date Tested	27-29 Nov. 2015	1-3 Dec. 2015	-
Pile Length (ft)	43.5	35.2	-
Creep at 200 tons (in./12 hr)	0.002	0.006	Not exceeding 0.012
Net Settlement after Unload (in.)	0.312	0.268	Not exceeding 0.75

Haley & Aldrich personnel observed and documented gauge and pump readings during the loading of Pile No. 22 and loading and unloading of Pile No. 49. Records by Haley & Aldrich are provided in Appendix F. Metric observed the loading and unloading of Pile No. 22; records provided by Metric are provided in Appendix G. Plots of test load versus pile settlement are shown in Figures 3 and 4.

A lateral load test was successfully performed on a pile, as summarized below:

Description	Pile No. 22	2008 NYCBC Requirement
Date Installed	18 Nov. 2015	-
Date Tested	4 Dec. 2015	-
Pile Length (ft)	43.5	-
Deflection at Design Load (in.)	0.127	Not exceeding 1.0

Haley & Aldrich personnel observed and documented gauge and pump readings during the loading and unloading of Pile No. 22. Records by Haley & Aldrich are provided in Appendix F. A plot of test load versus pile deflection is shown in Figure 5.

Conclusion and Recommendations

The results of the static compression load tests on the STELCOR® SC1200-550476-16129-8 drilled-in displacement micropiles indicated that the test piles meet the criteria in the Building Code for design capacities of 100 tons of compressive axial load and 2 tons of lateral load. Production piles should be installed using the procedures, equipment and final installation criteria used for the installation of the test piles.

Please do not hesitate to contact us should you have any questions or comments.

Sincerely yours,
HALEY & ALDRICH OF NEW YORK

Brett R. Grunert, P.E.	Paul B. Pizzimenti, P.E.	John T. Difini, P.E.
Senior Engineer	Senior Project Manager	Partner | Client Executive

Attachments:

Figure 1	Project Locus
Figure 2	Exploration and Test Pile Location Plan
Figure 3	Results of Axial Compression Load Test – Pile No. 22
Figure 4	Results of Axial Compression Load Test – Pile No. 49
Figure 5	Results of Lateral Load Test – Pile No. 22
Appendix A	Logs of Selected Test Borings
Appendix B	STELCOR® Cut Sheets
Appendix C	Pile Installation Logs
Appendix D	Results of Grout Breaks
Appendix E	Load Test Equipment and Calibration Information
Appendix F	Haley & Aldrich Axial Compression Load Test Results
Appendix G	Metric Consulting Axial Compression Load Test Report
Appendix H	Haley & Aldrich Lateral Load Test Results

\\new\common\40794 - 2065 Walton Ave\100 - Construction Support Services\Load Testing\Deliverables\2015-1211-HANY-Walton-PLT-F.docx

MAP SOURCE: ESRI

SITE COORDINATES: 40°51'14"N, 73°54'22"W

HALEY ALDRICH

2065 WALTON AVE
BRONX, NEW YORK

PROJECT LOCUS

APPROXIMATE SCALE: 1 IN = 2000 FT
DECEMBER 2015

FIGURE 1

40794-100_1_LOCUS.PDF

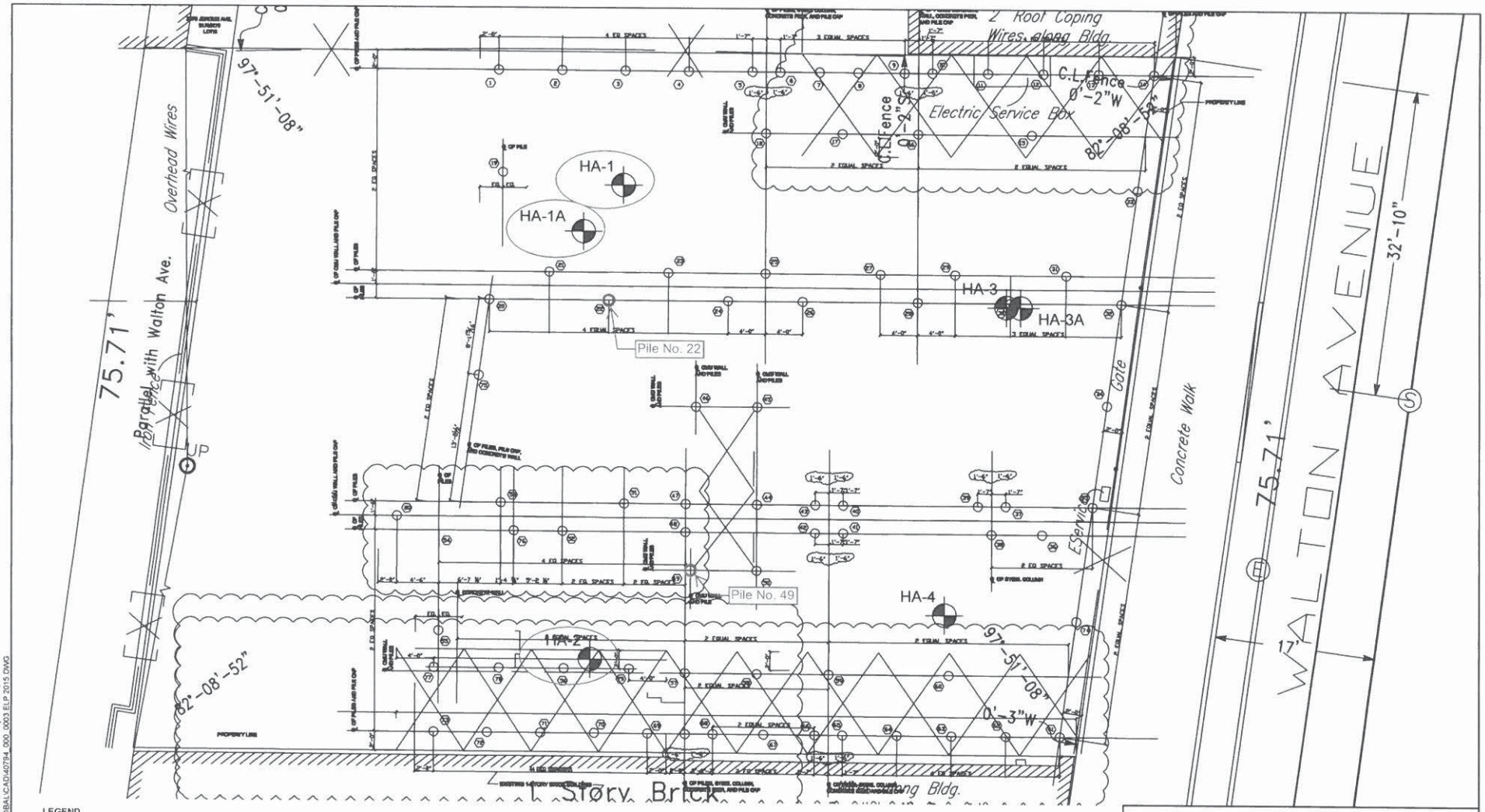

LEGEND

HA-2 DESIGNATION AND APPROXMATE LOCATION OF TEST BORING DRILLED BETWEEN 10 & 12 MARCH 2014 BY CRAIG GEOTECHNICAL TEST BORING CO. OF MAYS LANDING, NEW JERSEY.

INDICATES TEST BORING LOGS PROVIDED IN APPENDIX A

NOTES

1. BASE PLAN IS ELECTRONIC CAD IMAGE ENTITLED "SURVEY OF PILE I.D. PLAN AT 2065 WALTON AVENUE BRONX, CITY AND STATE OF NEW YORK DATED 25 NOVEMBER 2015 BY SUMMIT LAND SURVEYING P.C. OF DOBBS FERRY, NEW YORK.

0 10 20
SCALE IN FEET

HALEY ALDRICH

2065 WALTON AVENUE
BRONX, NEW YORK

EXPLORATIONS AND TEST PILE LOCATIONS

SCALE: AS SHOWN
DECEMBER 2015

FIGURE 2

POSTOLOWSKI, KEVIN Printed 12/8/2015 5:00 PM Layout: FIG 2
G:\40794 - 2065 WALTON AVE\GLOBAL\CAD\40794_000_0003 ELP 2015.DWG

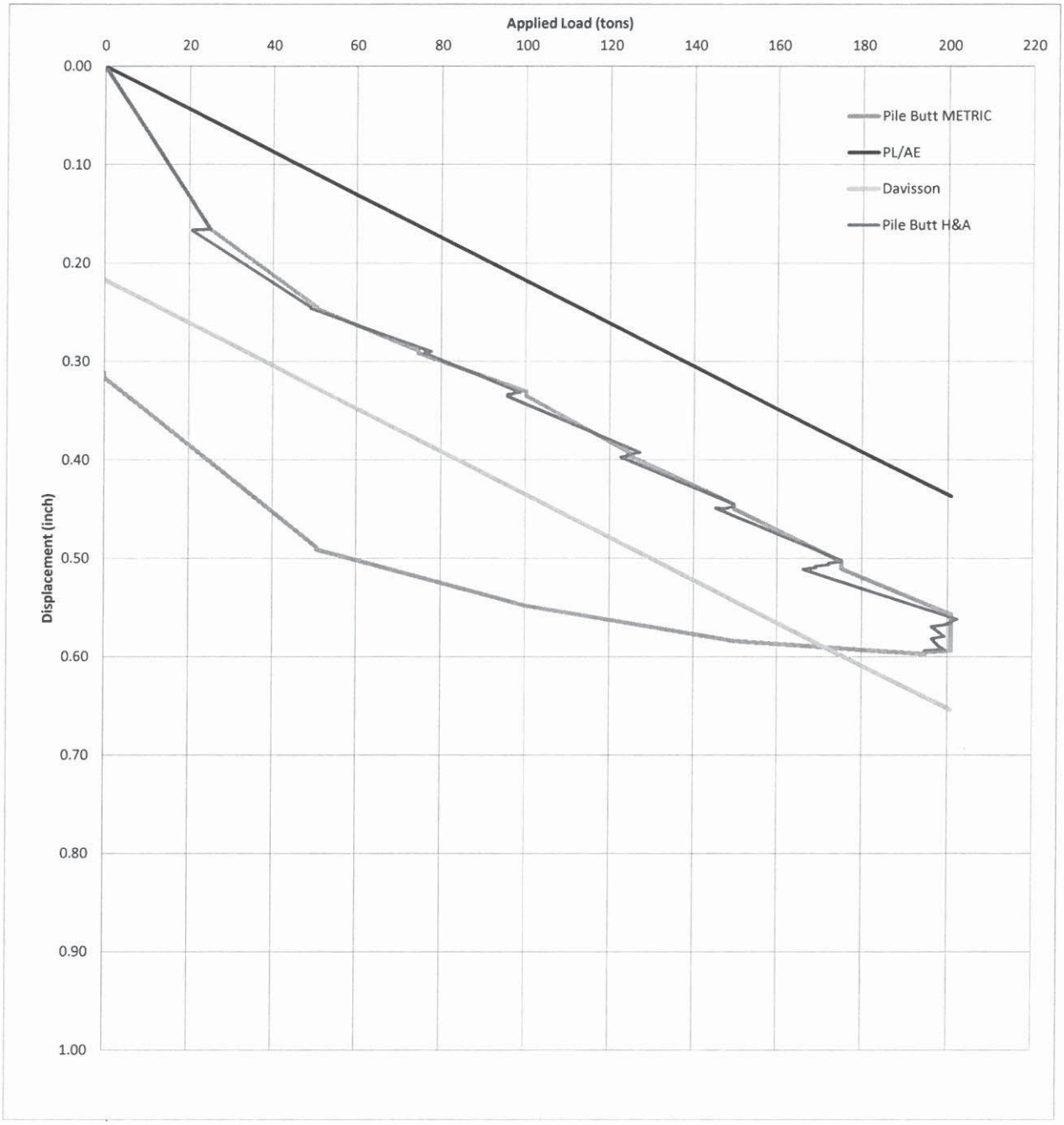

Note: No telltale movement recorded by Haley & Aldrich

HALEY ALDRICH

UNDERGROUND ENGINEERING & ENVIRONMENTAL SOLUTIONS

2065 Walton Ave
Bronx, NY

TEST PILE 22
LOAD IN PILE VS. APPLIED LOAD

File No. 40794-100 November 2015

FIGURE 3

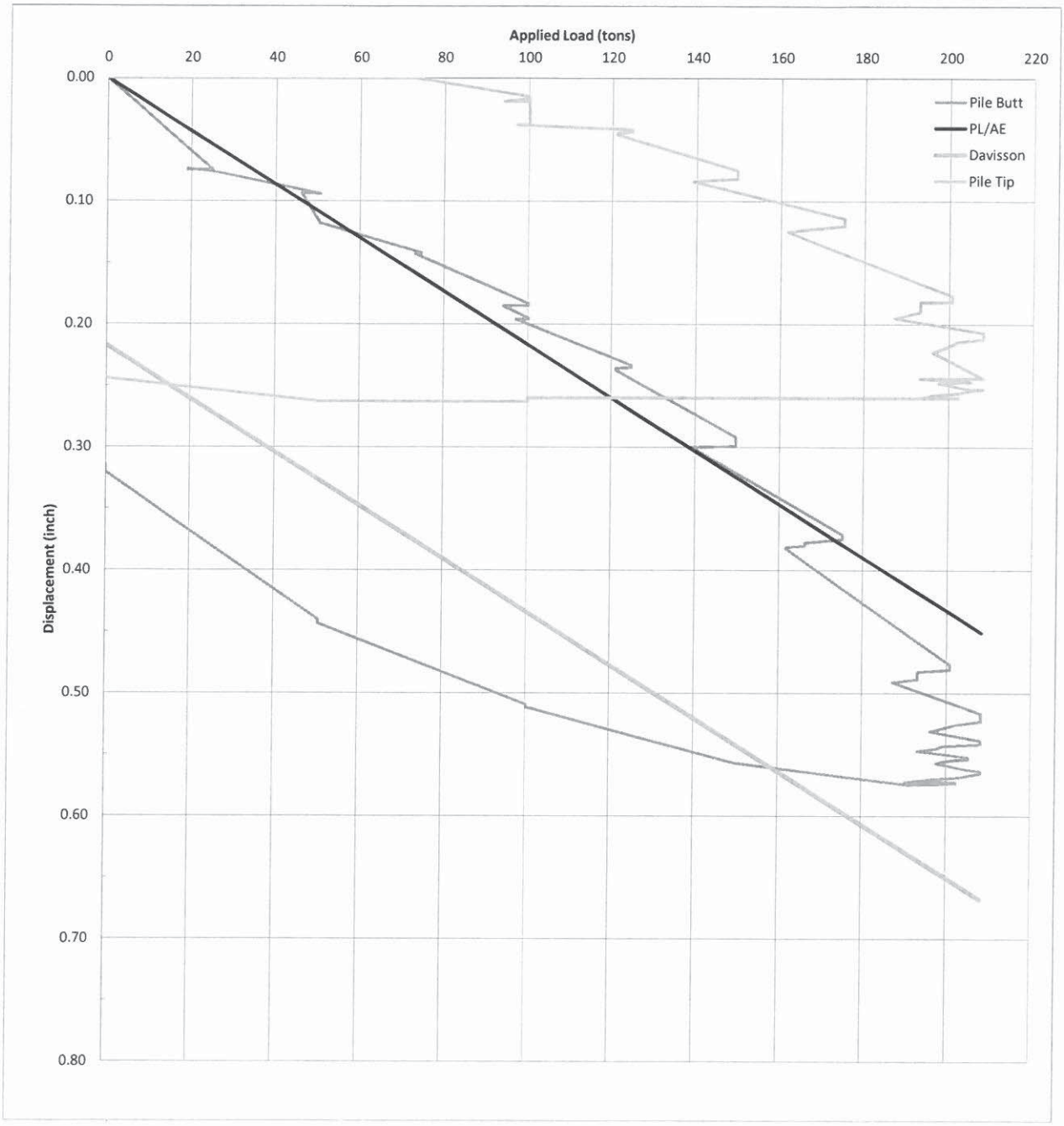

HALEY ALDRICH

UNDERGROUND ENGINEERING & ENVIRONMENTAL SOLUTIONS

2065 Walton Ave
Bronx, NY

TEST PILE 49
LOAD IN PILE VS. APPLIED LOAD

File No. 40794-100 December 2015

FIGURE 4

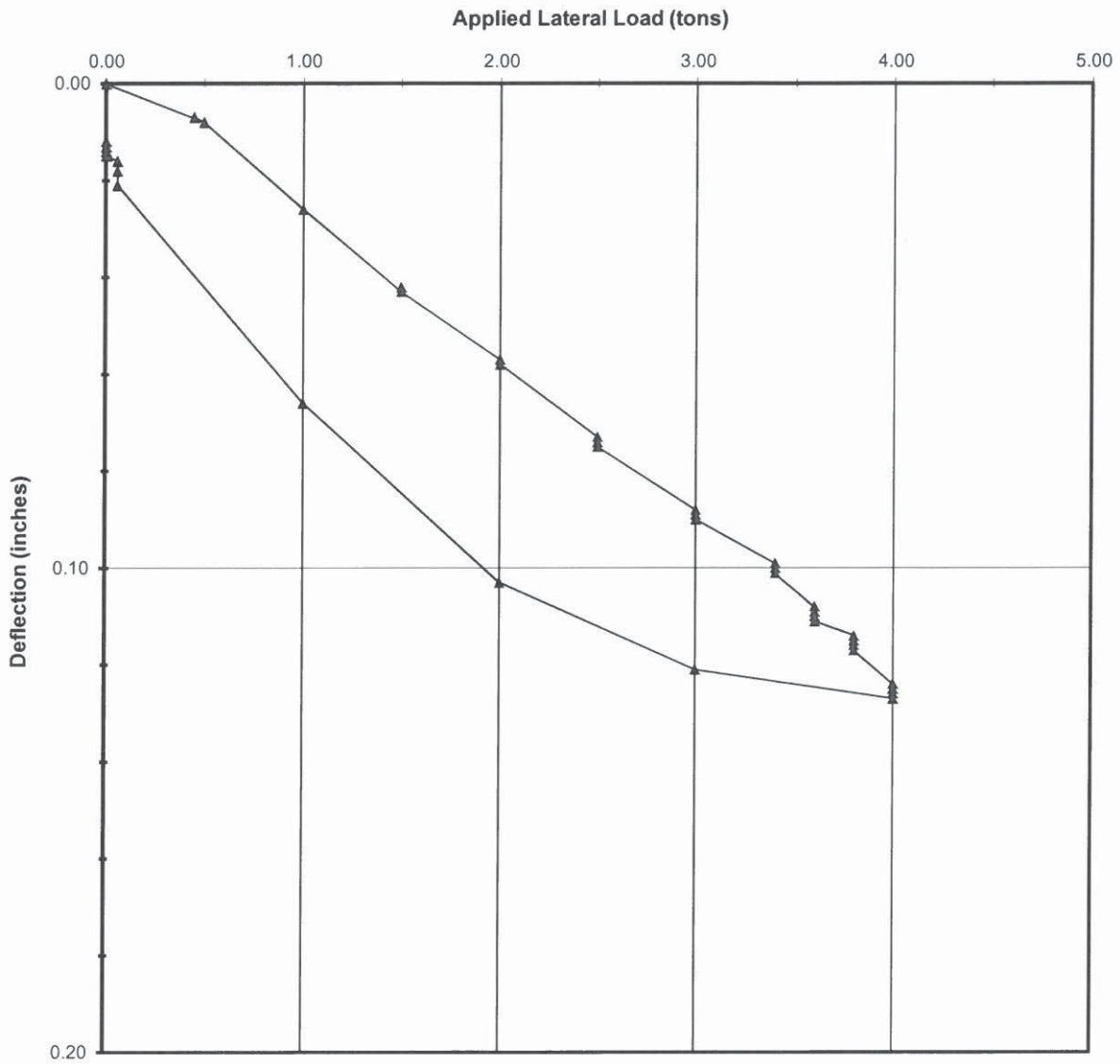

LEGEND :

Displacement (in.)

HALEY ALDRICH

2065 Walton Avenue Development
2065 Walton Avenue
BRONX, NEW YORK

DEFLECTION VS. APPLIED LOAD
PILE 22
LATERAL LOAD TEST

FILE NO. 40794-100

FIGURE 5

APPENDIX A

Logs of Selected Test Borings

HALEY & ALDRICH

TEST BORING REPORT

Boring No. HA-1/1A

Project	2065 Walton Avenue Bronx, New York
Client	B&B Supportive Housing LLC
Contractor	Craig Geotechnical Boring Co.

File No.	40794-000
Sheet No.	1 of 3
Start	March 10, 2014
Finish	March 12, 2014
Driller	K. Parent
H&A Rep.	B. Issac
Elevation	60.7
Datum	BRONX Boro Bureau
Location	See Exploration Location Plan

	Casing	Sampler	Barrel
Type	HW	S	NX
Inside Diameter (in.)	4	1.375	2
Hammer Weight (lb)	140	140	-
Hammer Fall (in.)	30	30	-

Drilling Equipment and Procedures

Rig Make & Model: CME 75
Bit Type: Roller Bit
Drill Mud: Polymer
Casing: Driven to 25 ft
Hoist/Hammer: Winch Automatic Hammer
PID Make & Model: N/A

Depth (ft)	Sampler Blows per 6 in.	Sample No. & Rec. (in.)	Sample Depth (ft)	Stratum Change Elev/Depth (ft)	USCS Symbol	VISUAL-MANUAL IDENTIFICATION AND DESCRIPTION (Density/consistency, color, GROUP NAME, max. particle size*, structure, odor, moisture, optional descriptions GEOLOGIC INTERPRETATION)	Gravel % Coarse	Gravel % Fine	Sand % Coarse	Sand % Medium	Sand % Fine	% Fines	Field Test Dilatancy	Field Test Toughness	Field Test Plasticity	Field Test Strength
0				60.2		6-in. thick asphalt cover on ground surface										
	7 10 5 6	S1 6	0.5 2.5	0.5	SP-SM	Medium dense brown poorly graded SAND with silt, no odor, dry, brick and concrete fragments (30%) [NYCBC Class: 7] -FILL-		25	20	30	15	10				
	3 3 3	S2 12	2.5 4.0			Loose red-brown brick fragments and particles [NYCBC Class: 7]										
5	3 16 76 21	S3 20	4.0 6.0			Very dense tan/gray concrete particles and crushed stone, brick fragments, likely former footing structure [NYCBC Class: 7]										
	100/1"	S4 1	6.0 6.1	53.7 7.0		Piece of crushed stone Note: Advanced borehole through concrete or boulder 7 to 8.5 ft using roller bit. [NYCBC Class: 7]										
10	92 100/4"	S5 8	9.0 10.0		SP-SM	Very dense gray-brown poorly graded SAND with pulverized rock fragments, possible boulders [NYCBC Class: 7] -FILL-										
		C1 36	11.5 14.5	49.2 11.5		Cored through obstruction from 11.5 to 17.5 ft depth. Pieces of gray-brown GNEISS with marble bands, gray SCHIST with garnet particles, likely gravel and boulders Note: No drilling mud during coring. [NYCBC Class: 7]										
		C2 36	14.5 17.5			Similar to C1 [NYCBC Class: 7] -FILL-										
				43.2 17.5		Note: Boring HA-1 was abandoned due to very difficult drilling conditions and severely damaged casing shoe and casing. Subsurface exploration was continued at HA-1A drilled 7 ft south-west of HA-1.										
				41.7 19.0		Bottom of FILL at approximately 19 ft depth based on drill rig response.										

Water Level Data

Date	Time	Elapsed Time (hr.)	Depth (ft) to: Bottom of Casing	Bottom of Hole	Water

Sample ID

O - Open End Rod
T - Thin Wall Tube
U - Undisturbed Sample
S - Split Spoon Sample

Well Diagram

Riser Pipe
Screen
Filter Sand
Cuttings
Grout
Concrete
Bentonite Seal

Summary

Overburden (ft)	62
Rock Cored (ft)	-
Samples	14S

Boring No. HA-1/1A

Field Tests: **Dilatancy**: R - Rapid S - Slow N - None **Toughness**: L - Low M - Medium H - High **Plasticity**: N - Nonplastic L - Low M - Medium H - High **Dry Strength**: N - None L - Low M - Medium H - High V - Very High

***Note: Maximum particle size is determined by direct observation within the limitations of sampler size.**

Note: Soil identification based on visual-manual methods of the USCS as practiced by Haley & Aldrich of New York.

HALEY & ALDRICH

TEST BORING REPORT

Boring No. HA-1/1A
File No. 40794-000
Sheet No. 2 of 3

Depth (ft)	Sampler Blows per 6 in.	Sample No. & Rec. (in.)	Sample Depth (ft)	Stratum Change Elev/Depth (ft)	USCS Symbol	VISUAL-MANUAL IDENTIFICATION AND DESCRIPTION (Density/consistency, color, GROUP NAME, max. particle size*, structure, odor, moisture, optional descriptions GEOLOGIC INTERPRETATION)	Gravel % Coarse	Gravel % Fine	Sand % Coarse	Sand % Medium	Sand % Fine	% Fines	Field Test Dilatancy	Field Test Toughness	Field Test Plasticity	Field Test Strength
	5 6 9 7	S1 20	20.0 22.0		SM	Medium dense olive-brown silty SAND, trace organics (5%), no odor [NYCBC Class: 3b]			5	25	70	20				
						-ALLUVIAL DEPOSITS-										
	2 3 3 5	S2 24	25.0 27.0		SM	Loose dark brown silty SAND and SILT with organics (10%), varved frequent, slight organic odor [NYCBC Class: 6]			15	20	30	35				
	4 5 7 14	S3 18	30.0 32.0		SP-SM	Medium dense poorly graded SAND with silt, stratified, wet [NYCBC Class: 3b]			20	35	35	10				
	6 6 5 11	S4 24	35.0 37.0		SM	Medium dense brown poorly graded SAND and silty SAND, varved frequent, wet [NYCBC Class: 3b]			15	35	30	30				
	5 6 8 9	S5 24	40.0 42.0		SM	Medium dense gray-brown silty SAND and SILT, varved frequent (>1/8 in.), wet [NYCBC Class: 3b]			5	10	45	40				
						-ALLUVIAL DEPOSITS-										
	5 3 16 23	S6 18	45.0 47.0		SP-SM	Medium dense brown poorly graded SAND with silt, occasional silt varve (1/2 in.), wet [NYCBC Class: 3b]			5	45	40	10				
				12.7 48.0												

Note: Soil identification based on visual-manual methods of the USCS as practiced by Haley & Aldrich of New York.

Boring No. HA-1/1A

HALEY & ALDRICH

TEST BORING REPORT

Boring No. HA-1/1A
File No. 40794-000
Sheet No. 3 of 3

Depth (ft)	Sampler Blows per 6 in.	Sample No. & Rec. (in.)	Sample Depth (ft)	Stratum Change Elev/Depth (ft)	USCS Symbol	VISUAL-MANUAL IDENTIFICATION AND DESCRIPTION (Density/consistency, color, GROUP NAME, max. particle size*, structure, odor, moisture, optional descriptions GEOLOGIC INTERPRETATION)	Gravel % Coarse	Gravel % Fine	Sand % Coarse	Sand % Medium	Sand % Fine	% Fines	Field Test Dilatancy	Field Test Toughness	Field Test Plasticity	Field Test Strength
	34 21 18 21	S7 12	50.0 52.0		SM	Dense gray-brown silty SAND with subangular gravel, well bonded, likely glacial deposit [NYCBC Class: 3a]		15	10	20	25	30				
						-GLACIAL DEPOSIT- Note: Rig chatter during advance.										
	34 31 21 25	S8 18	55.0 57.0		SM	Similar to above [NYCBC Class: 3a]		10	10	25	30	25				
				1.7 59.0												
	16 13 17 19	S9 20	60.0 62.0		SM	Dense light olive-gray silty SAND, clayey, micaceous, likely decomposed bedrock [NYCBC Class: 3a] -DECOMPOSED BEDROCK-			5	15	30	40				
				-1.3 62.0		BOTTOM OF EXPLORATION 62.0 FT										

Note: Soil identification based on visual-manual methods of the USCS as practiced by Haley & Aldrich of New York.

HALEY & ALDRICH

TEST BORING REPORT

Boring No. HA-2

Project	2065 Walton Avenue Bronx, New York
Client	B&B Supportive Housing LLC
Contractor	Craig Geotechnical Boring Co.

File No.	40794-000
Sheet No.	1 of 3
Start	March 10, 2014
Finish	March 10, 2014
Driller	K. Parent
H&A Rep.	B. Issac
Elevation	60.9
Datum	BRONX Boro Bureau
Location	See Exploration Location Plan

	Casing	Sampler	Barrel	Drilling Equipment and Procedures
Type	HW	S	-	Rig Make & Model: CME 75
Inside Diameter (in.)	4	1.375	-	Bit Type: Roller Bit Drill Mud: Polymer
Hammer Weight (lb)	140	140	-	Casing: Driven to 25 ft
Hammer Fall (in.)	30	30	-	Hoist/Hammer: Winch Automatic Hammer PID Make & Model: N/A

Depth (ft)	Sampler Blows per 6 in.	Sample No. & Rec. (in.)	Sample Depth (ft)	Stratum Change Elev/Depth (ft)	USCS Symbol	VISUAL-MANUAL IDENTIFICATION AND DESCRIPTION (Density/consistency, color, GROUP NAME, max. particle size*, structure, odor, moisture, optional descriptions GEOLOGIC INTERPRETATION)	Gravel % Coarse	Gravel % Fine	Sand % Coarse	Sand % Medium	Sand % Fine	% Fines	Field Test Dilatancy	Field Test Toughness	Field Test Plasticity	Field Test Strength
0				60.4		6-in. thick asphalt cover										
	2 3 9 6	S1 12	0.5 2.5	0.5	SM	Medium dense gray-brown silty SAND with gravel, dry, includes crushed stone, brick, glass pieces and fragments [NYCBC Class: 7]		15	20	25	20	20				
	6 6 2 3	S2 15	2.5 4.5		SM	Similar to S1, except loose [NYCBC Class: 7] -FILL-		10	15	20	30	25				
5	4 4 7 3	S3 10	4.5 6.5		SP-SM	Medium dense brown poorly graded SAND with silt and gravel, dry, includes trace brick fragments and pulverized gray-brown rock particles [NYCBC Class: 7]		15	20	25	30	10				
	6 5 7 3	S4 10	6.5 8.5	54.4 6.5	SM	Medium dense brown silty SAND with gravel, dry, includes pulverized gray-brown rock particles [NYCBC Class: 7]		20	20	20	25	15				
10	6 5 4 3	S5 12	8.5 10.5		SM	Similar to S4 [NYCBC Class: 7]										
	3 2 3 2	S6 2	10.5 12.5		SM	Loose brown silty SAND with two brick fragments [NYCBC Class: 7]										
						Note: Obstruction on casing advance at 13 ft. Hard drilling to approximately 15 ft depth.										
15	1 1 1 1	S7 3	15.0 17.0		SM	Very loose gray-brown silty SAND, rock fragments, slight kerosene-like odor, likely fill [NYCBC Class: 7]										
						-FILL-										
20																

Water Level Data

Date	Time	Elapsed Time (hr.)	Depth (ft) to: Bottom of Casing	Bottom of Hole	Water
3/11/14	0730	18	-	30	15
3/12/14	0700	12	-	30	14.8

Sample ID

O - Open End Rod
T - Thin Wall Tube
U - Undisturbed Sample
S - Split Spoon Sample

Well Diagram

Riser Pipe
Screen
Filter Sand
Cuttings
Grout
Concrete
Bentonite Seal

Summary

Overburden (ft)	72
Rock Cored (ft)	-
Samples	18S

Boring No. HA-2

Field Tests: **Dilatancy**: R - Rapid S - Slow N - None **Plasticity**: N - Nonplastic L - Low M - Medium H - High
Toughness: L - Low M - Medium H - High **Dry Strength**: N - None L - Low M - Medium H - High V - Very High

***Note: Maximum particle size is determined by direct observation within the limitations of sampler size.**

Note: Soil identification based on visual-manual methods of the USCS as practiced by Haley & Aldrich of New York.

HALEY & ALDRICH

TEST BORING REPORT

Boring No. HA-2
File No. 40794-000
Sheet No. 2 of 3

Depth (ft)	Sampler Blows per 6 in.	Sample No. & Rec. (in.)	Sample Depth (ft)	Stratum Change Elev/Depth (ft)	USCS Symbol	VISUAL-MANUAL IDENTIFICATION AND DESCRIPTION (Density/consistency, color, GROUP NAME, max. particle size*, structure, odor, moisture, optional descriptions GEOLOGIC INTERPRETATION)	Gravel % Coarse	Gravel % Fine	Sand % Coarse	Sand % Medium	Sand % Fine	% Fines	Field Test Dilatancy	Field Test Toughness	Field Test Plasticity	Field Test Strength
20	3 3 5 8	S8 20	20.0 22.0	40.4	SM	Loose gray-brown silty SAND, trace gravel [NYCBC Class: 7] -FILL-										
				20.5	SM	Olive-gray silty SAND, yellow-brown and dark brown mottling, piece of decomposed wood [NYCBC Class: 6] -ALLUVIAL DEPOSITS-			10	20	50	20				
25	3 3 4 5	S9 24	25.0 27.0		SM	Loose gray-brown silty SAND, thin silt varved (1/8 in.) with trace organics [NYCBC Class: 6]			10	20	40	30				
30	12 13 10 7	S10 18	30.0 32.0		SP-SM	Medium dense brown poorly graded SAND with silt, trace fine rounded gravel, stratified, coarse to fine sands [NYCBC Class: 3b]		5	15	30	40	10				
35	11 12 16 17	S11 20	35.0 37.0		SP-SM	Medium dense brown poorly graded SAND with silt, stratified [NYCBC Class: 3b] -ALLUVIAL DEPOSITS-			5	35	50	10				
40	5 6 8 10	S12 24	40.0 42.0		SP-SM	Medium dense gray-brown poorly graded SAND with silt, frequent thin (1/8 in.) varves of silt [NYCBC Class: 3b]				20	70	10				
45	5 6 7 9	S13 20	45.0 47.0		SM SP	From 45 to 45.5 ft, red-brown silty SAND parting From 45.5 to 47 ft, medium dense poorly graded SAND, stratified [NYCBC Class: 3b]				20 35	40 60	40 5				
				12.9 48.0		-GLACIAL DEPOSIT-										

Note: Soil identification based on visual-manual methods of the USCS as practiced by Haley & Aldrich of New York.

Boring No. HA-2

HALEY & ALDRICH

TEST BORING REPORT

Boring No. HA-2
File No. 40794-000
Sheet No. 3 of 3

Depth (ft)	Sampler Blows per 6 in.	Sample No. & Rec. (in.)	Sample Depth (ft)	Stratum Change Elev/Depth (ft)	USCS Symbol	VISUAL-MANUAL IDENTIFICATION AND DESCRIPTION (Density/consistency, color, GROUP NAME, max. particle size*, structure, odor, moisture, optional descriptions GEOLOGIC INTERPRETATION)	Gravel % Coarse	Gravel % Fine	Sand % Coarse	Sand % Medium	Sand % Fine	% Fines	Field Test Dilatancy	Field Test Toughness	Field Test Plasticity	Field Test Strength
50	17 17 20 15	S14 20	50.0 52.0		SM	Dense gray-brown silty SAND, trace fine gravel, well bonded [NYCBC Class: 3a]		5	10	25	40	20				
						-GLACIAL DEPOSIT-										
				8.9 52.0		Note: Rig chatter during advance.										
55	20 14 15 12	S15 18	55.0 57.0		SM	Medium dense olive-gray, red-brown and yellow-brown silty SAND with mica particles, likely decomposed bedrock [NYCBC Class: 3b]										
						-DECOMPOSED BEDROCK-										
60	4 6 9 13	S16 24	60.0 62.0		SM	Medium dense light olive-gray silty SAND with clay, micaceous, likely decomposed bedrock [NYCBC Class: 3b]				10	50	40				
65	5 6 12 15	S17 18	65.0 67.0		SM	Similar to S16, except olive-gray [NYCBC Class: 3b]				10	50	40				
70	2 5 7 10	S18 20	70.0 72.0		SM	Similar to S16 [NYCBC Class: 3b]				10	45	45				
				-11.1 72.0		BOTTOM OF EXPLORATION 72.0 FT										
						Note: Temporary well installed to 30 ft depth. Temporary well grouted on 3/12/2014.										

Note: Soil identification based on visual-manual methods of the USCS as practiced by Haley & Aldrich of New York.

Boring No. HA-2

APPENDIX C

Pile Installation Logs

HALEY ALDRICH

DRILLED IN DISPLACEMENT MICROPILE INSTALLATION REPORT

PILE NO. 22 (TEST PILE)

PROJECT	2065 Walton Avenue Development	H&A FILE NO.	40794-100
LOCATION	Bronx, New York	PROJECT MGI	P. Pizzimenti
CLIENT	2065 Walton Avenue Associates, LLC	FIELD REP	L. Buchanon
GEN. CONTRACTOR	G.K.C. Industries	DATE STARTE	11/18/15
PILE CONTRACTOR	Procomm Systems	DATE FINISHE	11/18/15

SOIL STRATA

Nearest Boring: 4A1	Soil Layer	Top of Layer Depth (ft)	Approx. N value	Soil Description
Boring Elevation	1			
	2			
Depth To Bottom Of Boring	3			
	4			
Depth Of Water Table	5			
	6			

AS-BUILT DATA

Approx. Grnd Surf. El.	50.9	ft
Top El.	.	ft
Initial Length Of Pile	42.5	ft
Tip El.	.	ft
Cut-off El.	TBD.	ft
Final Pile Length	.	ft

PILE DATA: STELLCORE 5.50' X 0.476w

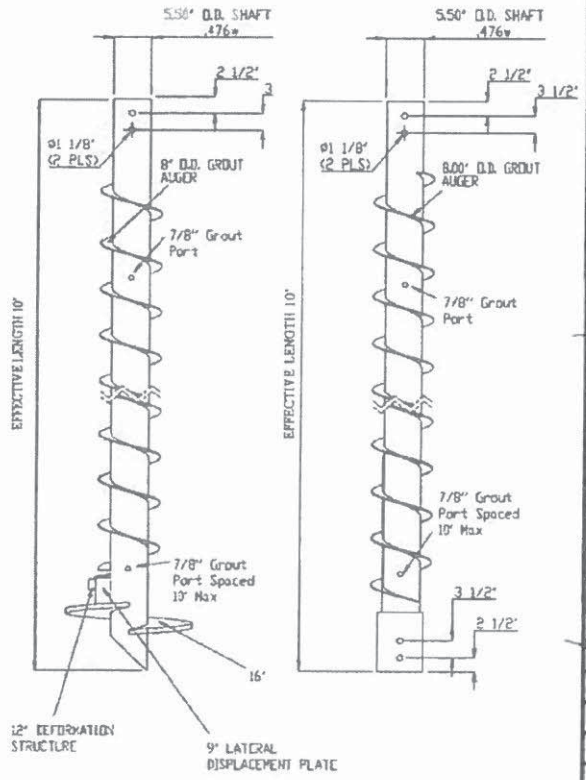

INSTALLATION DATA

Depth (ft)	Speed L/H	Torque (psi)	Torque (ft-lbs)	Depth (ft)	Speed L/H	Torque (psi)	Torque (ft-lbs)
1		L		26	H	2850	29400
2		H		27	H	2200	22700
3		H		28			
4		H		29	H	1800	18500
5		H		30	H	1800	18500
6		H		31			
7		H		32	H	2000	21000
8		H		33			
9		L		34	H	3200	33000
10				35	L	1300	25600
11		L		36	L	1500	29600
12		L		37	L	1600	31500
13				38	L	1700	33500
14				39	L	1900	37400
15	H	250	2600	40	L	2000	39400
16				41			
17	H	400	4100	42	L	1500	29600
18	H	400	4100	43			
19				44			
20	H	1350	13900	45			
21				46			
22	H	1800	18500	47			
23	H	2000	20600	48			
24	H	2600	26800	49			
25	H	2400	24900	50			

42.5 ft

GROUT DATA

Equipment	Grout Plant	Grout Pump	Grout Tube		
Type	Plant			Theoretical grout take	192 (approx) gal.
Manufacturer	ChemGrout			Measured grout take	237 gal.
Quantity	10 Bags Cement			Water/Cement Ratio	0.44
				Sample type	Cylinders
Materials	**Cement**	**Additive**	**Water**	Tested by	Dunan
Type	I-II		5 gal to 1 bag	Test results	
Manufacturer	Lehigh			Sample taken for testing: ☑ Yes ☐ No	
Quantity/mix	19.94 = 498 lbs		5.19 = 95 gal.	Remarks	3 cylinders were made
Total Quantity	142 gal				

Notes:

1. Pressure Gage Calibration Factor: Hi Torque Low Speed 1 ft-lb = 19.7 * psi, Low Torque High Speed 1 ft-lb = 10.3 @ psi

Pile drilled to approx 42.5 ft BGS

PILE NO. 22 (TEST PILE)

Form 4036 (grouted)

HALEY ALDRICH

DRILLED IN DISPLACEMENT MICROPILE INSTALLATION REPORT

PILE NO. 49 (TEST PILE)

PROJECT	2065 Walton Avenue Development	H&A FILE NO.	40794-100
LOCATION	Bronx, New York	PROJECT MGI	P. Pizzimenti
CLIENT	2065 Walton Avenue Associates, LLC	FIELD REP	L. Buchanon
GEN. CONTRACTOR	G.K.C. Industries	DATE STARTE	11/18/15
PILE CONTRACTOR	Procomm Systems	DATE FINISHE	11/19/15

SOIL STRATA

Nearest Boring: HA-2	Soil Layer	Top of Layer Depth (ft)	Approx. N value	Soil Description
Boring Elevation	1			
	2			
Depth To Bottom Of Boring	3			
	4			
Depth Of Water Table	5			
	6			

AS-BUILT DATA

Approx. Grnd Surf. El.	50.9	ft
Top El.	.	ft
Initial Length Of Pile	84.2	ft
Tip El.	.	ft
Cut-off El.	TBD	ft
Final Pile Length	.	ft

PILE DATA: STELLCORE 5.50' X 0.476w

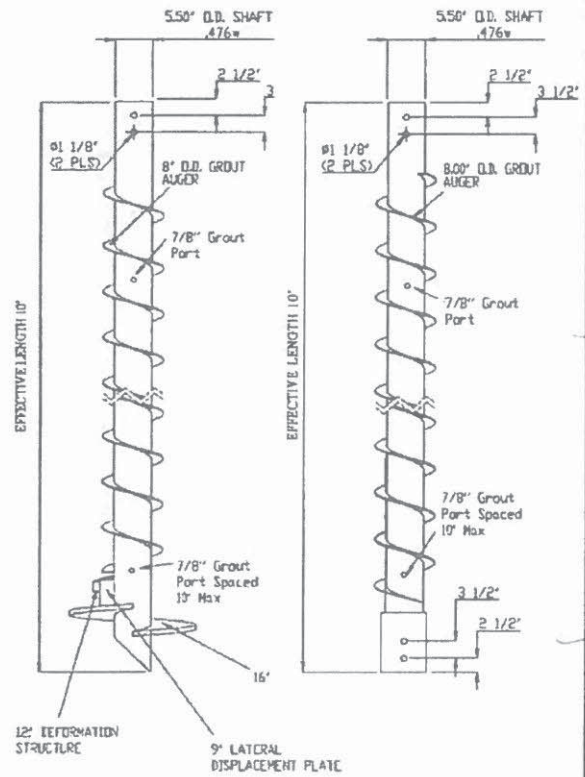

INSTALLATION DATA

Depth (ft)	Speed L/H	Torque (psi)	Torque (ft-lbs)	Depth (ft)	Speed L/H	Torque (psi)	Torque (ft-lbs)
1				26	H	2000	20400
2				27			
3				28	H	1800	18500
4				29			
5				30			
6				31	H	2700	27600
7				32	L	1800	35500
8				33	L	1900	37400
9				34	L	3000	59100
10				35			
11				36			
12				37			
13				38			
14				39			
15				40			
16				41			
17				42			
18				43			
19				44			
20	H	1500	15400	45			
21	H	2000	24000	46			
22	H	3000	30800	47			
23	L	1500	29600	48			
24	L	1600	31500	49			
25				50			

~34.2'

GROUT DATA

Equipment	Grout Plant	Grout Pump	Grout Tube		
Type	Plant			Theoretical grout take	154 gal.
Manufacturer	ChemGrout			Measured grout take	102 gal.
Quantity	13 bags cement			Water/Cement Ratio	0.44
Materials	**Cement**	**Additive**	**Water**	Sample type	Cylinders
Type	I-II		Spill w/ bag	Tested by	Damon
Manufacturer	Lehigh			Test results	
Quantity/mix	13(cu) = 1122 lbs		5(13) = 65 gal.	Sample taken for testing: ☑ Yes ☐ No	
Total Quantity				Remarks	3 cylinders were made

Notes:

1. Pressure Gage Calibration Factor: Hi Torque Low Speed 1 ft-lb = 19.7 * psi, Low Torque High Speed 1 ft-lb = 10.3 * psi

70FT of Pile was initially installed but was refused due to no grout intake. Pile was removed and the silty SAND was sluiced out to 15-17FT. New Pile was installed afterwards

PILE NO. 49 (TEST PILE)

Form 4036 (grouted)

APPENDIX D

Results of Grout Breaks

L.M.C.
MATERIALS TESTING

226 East Merrick Road
Valley Stream, New York 11580
P. 516.825.2737

NYCDOB Concrete Testing Laboratory #000099

Client: Domani
Site Address: 2065 Walton Ave, Bronx, NY
Project ID:DOMINS0078
Inspector(s): As per Contractor

Inspection Date: 11/18/15
Time In/Out: 8:00 AM - 12:00 PM
Report Number: 78 - GRO - 11182015
Site Weather: 65 F

Laboratory Compression Test Data

Owner: Bell Urban	General Contractor: GKC Industries, Inc.	Sub Contractor: Procomm System, Inc.
Supplier: Portland cement type-1 & 2	Total Yardage Placed: N/A	Site Contact:
Mix Design On Site: N/A	Curing Box On Site: No	Conditon of CB: N/A
Location of Pour: Piles # 22 & 49		

Truck Number	Batch Ticket Number	Batch Time	Sample Time	Slump (C143)	Air % (C231/C173)	Conc. Temp. (C1064)	Unit Wt. (C138)	Design Strength (PSI)	Sample Set Number
-	-	9:45 AM	11:00 AM	-	-	65 F	-	5000	1

Date Cast	Sample ID#	Age	Date Tested	Sample Size	Cross-Sectional Area (sq. in.)	Total Load (lbs)	Total Strength (PSI)	Total of Design (%)	Fracture Type
11/18/15	15-24855	3	11/21/15	3.00 x 6.00	7.07	53710	**7597**	**100%**	3
11/18/15	15-24856	7	11/25/15	3.00 x 6.00	7.07	64770	**9161**	**100%**	2
11/18/15	15-24857	7	11/25/15	3.00 x 6.00	7.07	59880	**8470**	**100%**	2
11/18/15	15-24858	28	12/16/15	3.00 x 6.00	7.07		**0**	**0%**	
11/18/15	15-24858	28	12/16/15	3.00 x 6.00	7.07		**0**	**0%**	
11/18/15	15-24858	28	12/16/15	3.00 x 6.00	7.07		**0**	**0%**	

Laboratory Technician: Ron Denton
ACI #: 01303532

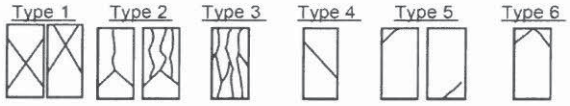

Type 1: Reasonably well formed cones on both ends, <1" of cracking through caps
Type 2: Well formed cone on one end, vertical cracks running through caps
Type 3: Columnar vertical cracking through both ends, no well formed cones
Type 4: Diagonal fracture with no cracking through ends
Type 5: Side fractures top and bottom
Type 6: Similar to type 5 but end of cylinder is pointed

Informational purposes only until box is stamped, signed and sealed by PE.

Reviewed By: James M. Patterson P.E Date:

APPENDIX E

Load Test Equipment and Calibration Information

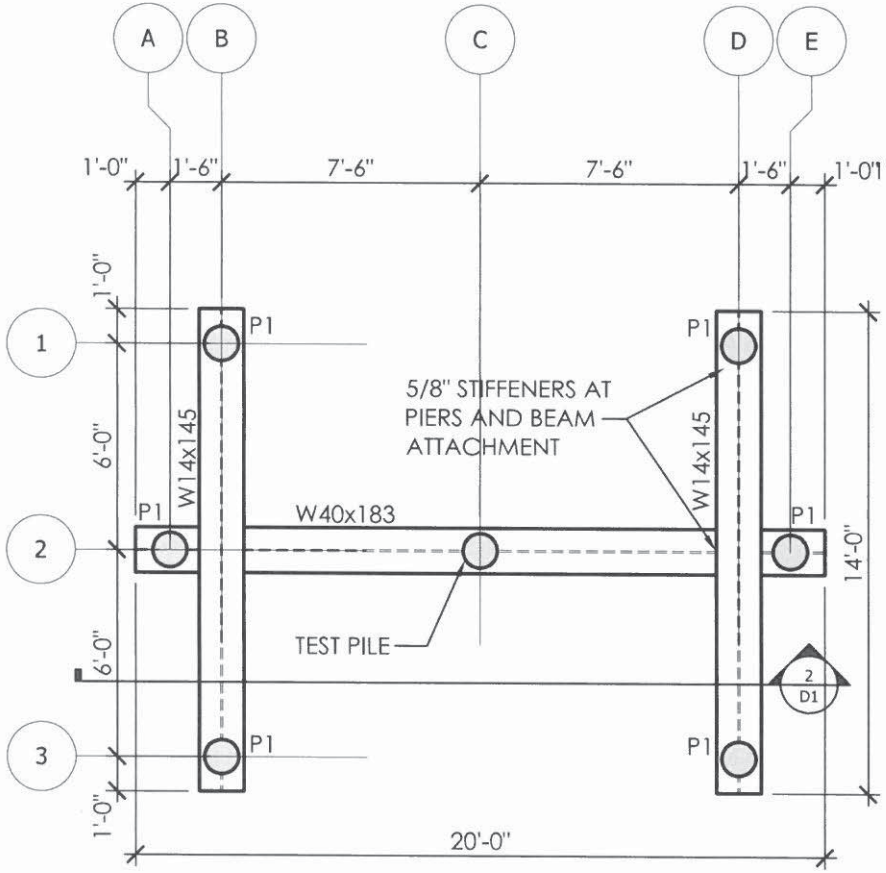

1 TEST PILE PLAN

Scale: 3/16" = 1'-0"

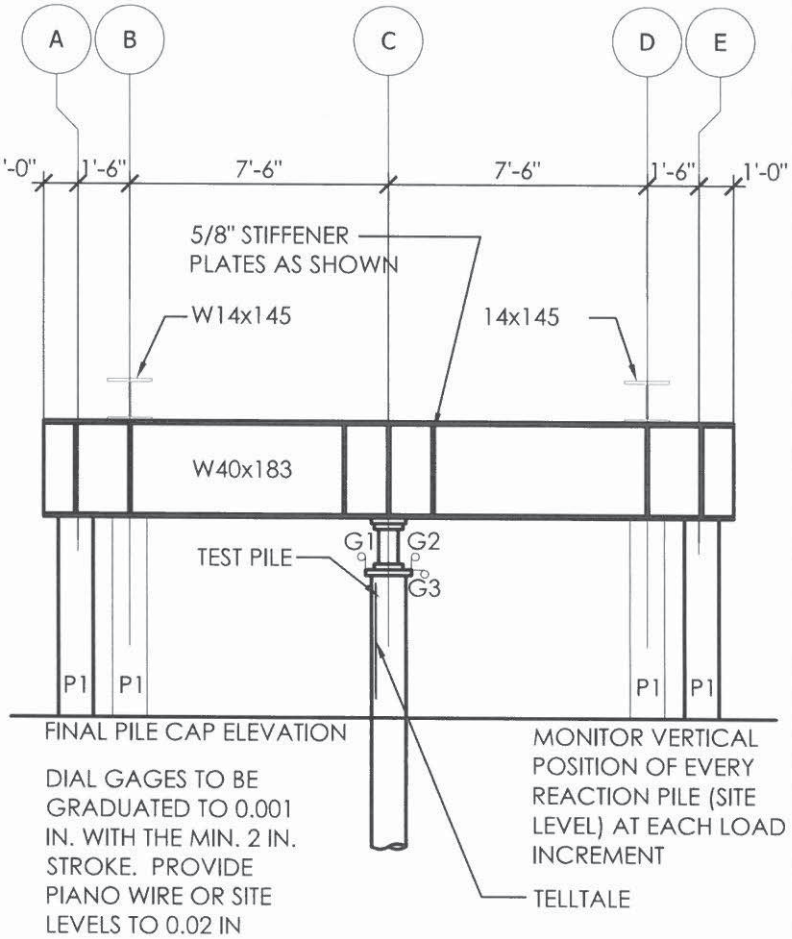

2 TEST PILE SECTION

Scale: 3/16" = 1'-0"

conn engineering consultants, inc.
commercial·industrial·institutional·residential structural engineering
107 n. bridge st.
linden, mi 48451
p. 810.458.4350
f. 810.458.4592
www.connengineering.com

job information:

LOAD TEST SETUP

ISSUED FOR	DATE
APPROVAL	09.22.15

DATE : 09.22.15
DRAWN : JMC
CHECKED : BMR
SCALE : AS NOTED
JOB NO : 15-801
SHEET TITLE : TEST SETUP

SHEET D1

W. B. EQUIPMENT SERVICE CO. INC
127 OAK STREET
WOOD RIDGE, NJ 07075
TEL: 201-438-7800 FAX: 201-438-7830

Date: 11/13/15

W.B. EQUIPMENT SERVICE CO. INC NO: _____

CUSTOMER: PROCOMM ORDER NO: _____

CYLINDER: 300 TONS STROKE: 6" SERIAL NO: WB335

GAUGE: 4 INCH DIAMETER: 10000 PSI SERIAL NO: WB988

CYLINDER FORCE TONS	GAUGE READINGS-PSI AT RAM EXTENSIONS		AVERAGE PRESSURE PSI
	1 INCH	4 INCHES	
0	0	0	0
25	900	900	900
50	1750	1750	1750
75	2525	2550	2550
100	3400	3400	3400
125	4200	4225	4225
150	5050	5050	5050
175	5875	5900	5900
200	6750	6750	6750
250	8375	8400	8400

CALIBRATION PERFORMED BY:DARREN CIRECO
OUTPUT MEASURED BY LOAD CELL MODEL # 5005, SERIAL # D WITH STRAIN INDICATOR P3, SERIAL # 158559

PRESSURE VS FORCE

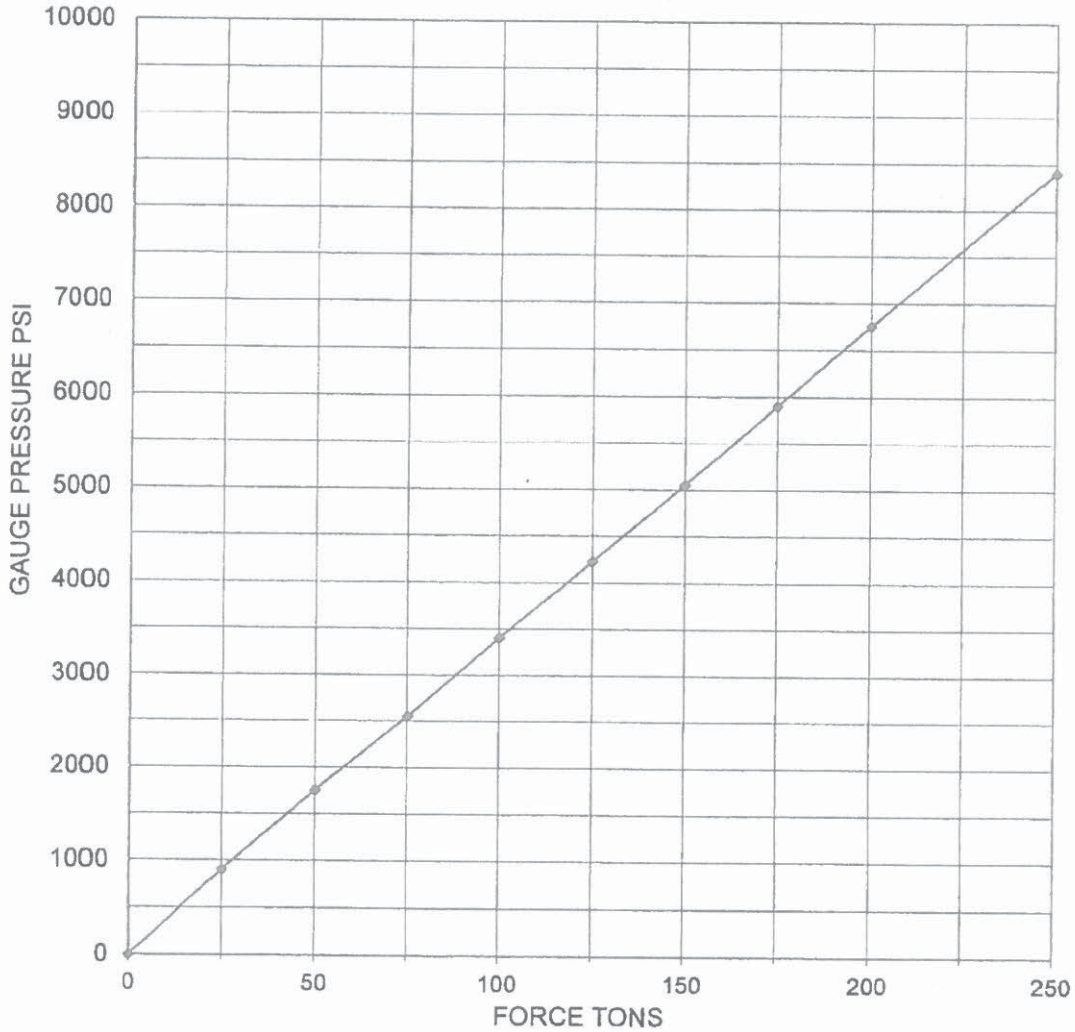

W. B. EQUIPMENT SERVICE CO. INC.
127 OAK STREET
WOOD-RIDGE, NJ 07075
TEL: 201-438-7800 FAX: 201-438-7830

GAUGE CERTIFICATION

W. B. EQUIPMENT SERVICE CO NO: DATE: 11/13/15

CUSTOMER: PROCOMM

ORDER NO:

GAUGE SERIAL NO: CAPACITY

10000 PSI

WB988 4 INCH DIAL

WE CERTIFY THAT THE HYDRAULIC GAUGES LISTED ABOVE HAVE BEEN TESTED PRIOR TO SHIPMENT AND FOUND TO BE WITHIN STANDARD COMMERCIAL ACCURACY OF 2% PLUS-OR-MINUS OF FULL SCALE.

VERY TRULY YOURS,
W. B. EQUIPMENT SERVICE CO. INC.

DARREN CIRECO

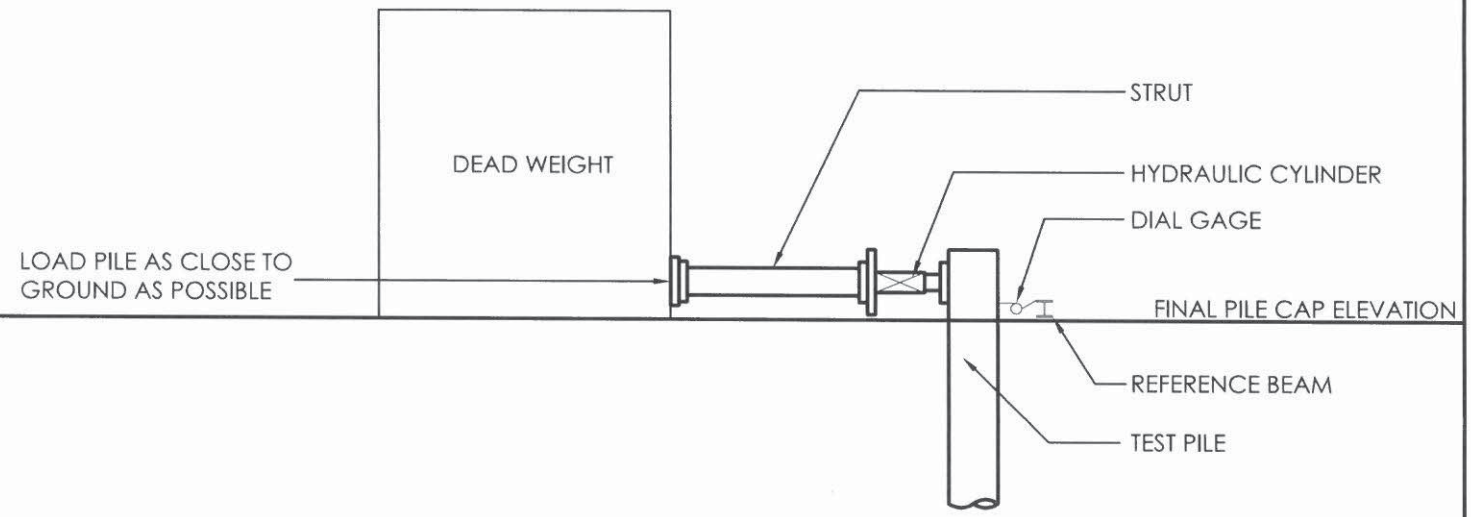

1 TEST PILE ELEVATION

Scale: 3/16" = 1'-0"

conn engineering
consultants, inc.
commercial•industrial•institutional•residential
structural engineering
107 n. bridge st.
linden, mi 48451
p. 810.458.4350
f. 810.458.4592
www.conneng.com

job information:

LOAD TEST SETUP

ISSUED FOR	DATE
APPROVAL	09.22.15

DATE : 09.22.15

DRAWN : JMC

CHECKED : BMR

SCALE : AS NOTED

JOB NO : 15-801

SHEET TITLE :
TEST SETUP

SHEET
D2

W. B. EQUIPMENT SERVICE CO. INC
127 OAK STREET
WOOD RIDGE, NJ 07075
TEL: 201-438-7800 FAX: 201-438-7830

Date: 11/30/15

W.B. EQUIPMENT SERVICE CO. INC NO: _____

CUSTOMER: PROCOMM SYSTEMS ORDER NO: _____

CYLINDER: 10 TONS STROKE: 6" SERIAL NO: WB1217

GAUGE: 4 INCH DIAMETER: 10000 PSI SERIAL NO: WB975

CYLINDER FORCE TONS	GAUGE READINGS-PSI AT RAM EXTENSIONS		AVERAGE PRESSURE PSI
	1 INCH	2 INCHES	
0	0	0	0
0.5	500	500	500
1	950	950	950
1.5	1375	1400	1400
2	1850	1850	1850
2.5	2300	2300	2300
3	2725	2750	2750
3.5	3175	3175	3175
4	3650	3650	3650
8	7175	7200	7200

CALIBRATION PERFORMED BY:DARREN CIRECO
OUTPUT MEASURED BY AN OHAUS LOAD CELL, MODEL # 120W, SERIAL # 11467 WITH STRAIN INDICATOR 120W, SERIAL # 11467

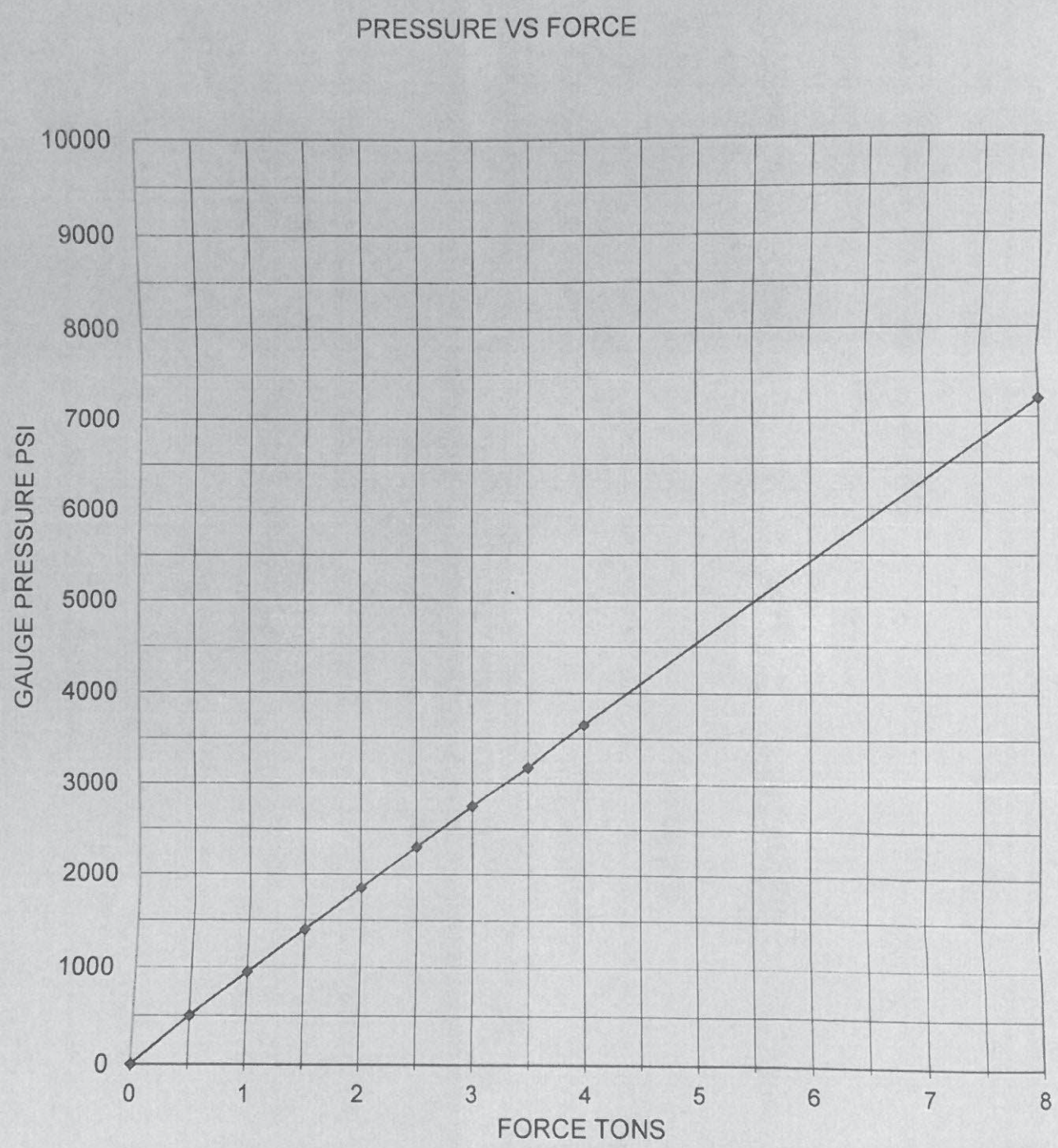
PRESSURE VS FORCE
GAUGE PRESSURE PSI
10000
9000
8000
7000
6000
5000
4000
3000
2000
1000
0
0
1
2
3
4
5
6
7
8
FORCE TONS

W. B. EQUIPMENT SERVICE CO. INC.
127 OAK STREET
WOOD-RIDGE, NJ 07075
TEL: 201-438-7800 FAX: 201-438-7830

GAUGE CERTIFICATION

W. B. EQUIPMENT SERVICE CO NO: DATE: 11/30/15

CUSTOMER: PROCOMM SYSTEMS

ORDER NO:

GAUGE SERIAL NO: CAPACITY

10000 PSI

WB975 4 INCH DIAL

WE CERTIFY THAT THE HYDRAULIC GAUGES LISTED ABOVE HAVE BEEN TESTED PRIOR TO SHIPMENT AND FOUND TO BE WITHIN STANDARD COMMERCIAL ACCURACY OF 2% PLUS-OR-MINUS OF FULL SCALE.

VERY TRULY YOURS,
W. B. EQUIPMENT SERVICE CO. INC.

DARREN CIRECO

APPENDIX F

Haley & Aldrich
Axial Compression Load Test Results

HALEY ALDRICH
Haley & Aldrich of New York
299 Cherry Hill RD, Suite 303
Parsippany, NJ 07054
Phone: 973-263-3900

Pile Load Test - Field Data Sheet

FILE No: 40794-100
PROJECT: 2065 Walton Ave Development
LOCATION: Bronx, New York

E INFORMATION

I.D. No.: 22
Type: STELCOR 5.5" X 0.476W Micropile
Area: 23.8 in^2
Length: 43.2 ft
Design Load: 100 tons
Jack Calibration: Load = 33 * Pressure + 63

H&A REP: B. GRUNERT
DATE: '27 November 2015

Target Load (tons)	Elapsed Time (min.)	Elapsed Time (sec.)	Actual Time (hh:mm)	Dial Gauge Readings - Pile Butt: Gauge No. 1 (in.)	Gauge No. 2 (in.)	Gauge No. 3 (in.)	Gauge No. (in.)	Piano Wire Reading (in)	Applied Load Hydraulic Jack (psi)	Remarks
0	0	0	08 ;20	0.300	0.400	0.600		3.000	0	
25	1	0	8:25	0.505	0.535	0.758		3.031	900	
	2	0	8:26	0.505	0.535	0.758		3.031	850	
	4	0	8:28	0.506	0.535	0.758		3.031	850	
	8	0	8:32	0.506	0.535	0.758		3.031	800	
	16	0	8:40	0.506	0.536	0.758		3.031	750	
	32	0	8:56	0.506	0.537	0.758		3.031	750	
50	1	0	9:19	0.566	0.680	0.790		3.063	1700	
	2	0	9:20	0.566	0.680	0.790		3.063	1700	
	4	0	9:22	0.566	0.680	0.790		3.063	1700	
	8	0	9:26	0.567	0.681	0.790		3.063	1700	
	16	0	9:34	0.567	0.681	0.791		3.063	1700	
	32	0	9:50	0.567	0.681	0.791		3.063	1700	
75	1	0	9:52	0.596	0.733	0.841		3.109	2650	
	2	0	9:53	0.596	0.733	0.841		3.109	2600	
	4	0	9:55	0.596	0.733	0.841		3.109	2600	
	8	0	9:59	0.597	0.734	0.842		3.109	2600	
	16	0	10:07	0.597	0.734	0.842		3.109	2600	
	32	0	10:23	0.598	0.735	0.843		3.109	2600	
100	1	0	10:25	0.636	0.771	0.887		3.125	3350	
	2	0	10:26	0.637	0.772	0.888		3.125	3300	
	4	0	10:28	0.638	0.773	0.888		3.125	3300	
	8	0	10:32	0.638	0.774	0.889		3.125	3250	
	16	0	10:40	0.639	0.775	0.889		3.125	3250	
	32	0	10:56	0.640	0.776	0.890		3.125	3250	
125	1	0	11:21	0.699	0.833	0.946		3.188	4300	
	2	0	11:22	0.700	0.834	0.947		3.188	4250	
	4	0	11:24	0.702	0.836	0.948		3.188	4200	
	8	0	11:28	0.702	0.836	0.948		3.188	4200	

HALEY ALDRICH	Haley & Aldrich of New York 299 Cherry Hill RD, Suite 303 Parsippany, NJ 07054 Phone: 973-263-3900	**Pile Load Test - Field Data Sheet**	**FILE No:** 40794-100 **PROJECT:** 2065 Walton Ave Development **LOCATION:** Bronx, New York

E INFORMATION

I.D. No.: 22 | Area: 23.8 in^2 | Design Load: 100 tons | **H&A REP: B. GRUNERT**

Type: STELCOR 5.5" X 0.476W Micropile | Length: 43.2 ft | Jack Calibration: Load = 33 * Pressure + 63 | **DATE: '27 November 2015**

Target Load (tons)	Elapsed Time (min.)	Elapsed Time (sec.)	Actual Time (hh:mm)	Dial Gauge Readings - Pile Butt: Gauge No. 1 (in.)	Gauge No. 2 (in.)	Gauge No. 3 (in.)	Gauge No. (in.)	Piano Wire Reading (in)	Applied Load Hydraulic Jack (psi)	Remarks
	16	0	11:36	0.703	0.836	0.948		3.188	4200	
	32	0	11:52	0.704	0.837	0.948		3.188	4200	
	60	0	12:20	0.704	0.839	0.949		3.188	4150	
150	1	0	12:25	0.751	0.887	0.997		3.219	5050	
	2	0	12:26	0.753	0.889	0.998		3.219	5050	
	4	0	12:28	0.753	0.890	0.999		3.219	5050	
	8	0	12:32	0.754	0.891	1.000		3.219	5000	
	16	0	12:40	0.754	0.892	1.001		3.219	5000	
	32	0	12:56	0.754	0.893	1.002		3.219	4950	
	60	0	13:24	0.754	0.893	1.001		3.219	4900	
175	1	0	13:25	0.802	0.945	1.059		3.313	5900	
	2	0	13:26	0.804	0.946	1.06		3.313	5900	
	4	0	13:28	0.806	0.948	1.061		3.313	5800	
	8	0	13:32	0.807	0.950	1.063		3.313	5800	
	16	0	13:40	0.809	0.951	1.064		3.313	5700	
	32	0	13:56	0.810	0.953	1.066		3.313	5700	
	60	0	14:24	0.811	0.955	1.068		3.313	5600	
200	1	0	14:25	0.856	1.002	1.128		3.375	6800	
	2	0	14:26	0.859	1.003	1.130		3.375	6750	
	4	0	14:28	0.860	1.005	1.131		3.375	6750	
	8	0	14:32	0.862	1.008	1.133		3.375	6700	
	16	0	14:40	0.864	1.010	1.135		3.375	6600	
	32	0	14:56	0.873	1.020	1.146		3.375	6700	
	60	0	15:24	0.875	1.022	1.148		3.375	6600	
	120	0	16:24	0.881	1.029	1.156		3.375	6650	
	180	0	17:24	0.885	1.033	1.161		3.375	6700	
	240	0	18:24	0.886	1.034	1.162		3.375	6550	Last reading by H&A

NOTES: Piano wire reading is on a 1/32" scale

HALEY ALDRICH	Haley & Aldrich of New York 299 Cherry Hill RD, Suite 303 Parsippany, NJ 07054 Phone: 973-263-3900	**Pile Load Test - Field Data Sheet**	**FILE No:** 40794-100 **PROJECT:** 2065 Walton Ave Development **LOCATION:** Bronx, New York

E INFORMATION

I.D. No.: 49 — Area: 23.8 in^2 — Design Load: 100 tons — **H&A REPS: S. Bruni / N. DeRouchey**

Type: STELCOR 5.5" X 0.476W Micropile — Length: 35.2 ft — Jack Calibration: Load = 33 * Pressure + 63 — **DATE: '1-3 December 2015**

Target Load	Elapsed Time		Actual Time	Dial Gauge Readings - Pile Butt			Gauge No. 4	Piano Wire	Applied Load	Remarks
				Gauge No. 1	Gauge No. 2	Gauge No. 3	Telltale	Reading	Hydraulic Jack	
(tons)	(min.)	(sec.)	(hh:mm)	(in.)	(in.)	(in.)	(in.)	(in)	(psi)	
0	0	0	9:10	1.000	1.000	1.000	0.700	1.406	0	
25	0	0	9:11	0.970	0.915	0.889	0.700	1.406	900	
	0	30	9:12	0.970	0.915	0.889	0.700	1.406	900	
	1	0	9:12	0.971	0.916	0.889	0.700	1.406		
	2	0	9:13	0.971	0.916	0.889	0.700	1.406	700	
	4	0	9:15	0.972	0.917	0.890	0.700	1.406	700	Pressure loss
	8	0	9:19	0.970	0.914	0.888	0.700	1.406	900	Pump topped off
	16	0	9:27	0.969	0.914	0.888	0.700	1.406		
	32	0	9:43	0.970	0.914	0.888	0.700	1.406		
50	0	0	9:43	0.927	0.876	0.856	0.700	1.438	1750	
	0	30	9:44	0.927	0.876	0.856	0.700	1.438		
	1	0	9:44	0.927	0.875	0.856	0.700	1.438		
	2	0	9:45	0.927	0.875	0.856	0.700	1.438		
	4	0	9:47	0.927	0.876	0.856	0.700	1.438	1600	Pressure loss
	8	0	9:51	0.921	0.872	0.852	0.700	1.438	1750	Pump topped off
	16	0	9:59	0.921	0.872	0.852	0.700	1.438	1750	
	32	0	10:15	0.921	0.872	0.852	0.700	1.438		
75	0	0	10:15	0.893	0.855	0.828	0.700	1.469	2550	
	0	30	10:15	0.892	0.854	0.828	0.700	1.469		
	1	0	10:16	0.892	0.854	0.828	0.700	1.469		
	2	0	10:17	0.891	0.854	0.828	0.700	1.469		
	4	0	10:19	0.891	0.854	0.828	0.700	1.469		
	8	0	10:23	0.891	0.854	0.828	0.700	1.469		
	16	0	10:31	0.891	0.853	0.827	0.700	1.469	2500	
	32	0	10:47	0.891	0.853	0.827	0.700	1.469		
100	0	0	10:47	0.845	0.823	0.786	0.700	1.500	3400	
	0	30	10:48	0.845	0.823	0.786	0.700	1.500		
	1	0	10:48	0.844	0.823	0.784	0.685	1.500		
	2	0	10:50	0.842	0.820	0.783	0.683	1.500		
	4	0	10:52	0.842	0.820	0.783	0.683	1.500		

HALEY ALDRICH
Haley & Aldrich of New York
299 Cherry Hill RD, Suite 303
Parsippany, NJ 07054
Phone: 973-263-3900

Pile Load Test - Field Data Sheet

FILE No: 40794-100
PROJECT: 2065 Walton Ave Development
LOCATION: Bronx, New York

E INFORMATION

I.D. No.: 49 | Area: 23.8 in^2 | Design Load: 100 tons | **H&A REPS: S. Bruni / N. DeRouchey**

Type: STELCOR 5.5" X 0.476W Micropile | Length: 35.2 ft | Jack Calibration: Load = 33 * Pressure + 63 | **DATE: '1-3 December 2015**

Target Load (tons)	Elapsed Time (min.)	Elapsed Time (sec.)	Actual Time (hh:mm)	Dial Gauge Readings - Pile Butt: Gauge No. 1 (in.)	Gauge No. 2 (in.)	Gauge No. 3 (in.)	Gauge No. 4 Telltale (in.)	Piano Wire Reading (in)	Applied Load Hydraulic Jack (psi)	Remarks
	8	0	10:56	0.841	0.820	0.783	0.681	1.500	3200	
	16	0	11:04	0.831	0.812	0.772	0.681	1.500	3400	Pump topped off
	32	0	11:20	0.830	0.811	0.771	0.662	1.500		
	60	0	11:48	0.830	0.811	0.771	0.662	1.500	3300	
125	0	0	11:50	0.788	0.786	0.731	0.659	1.531	4225	
	0	30	11:50	0.788	0.786	0.731	0.659	1.531		
	1	0	11:51	0.786	0.784	0.730	0.658	1.531		
	2	0	11:52	0.785	0.783	0.728	0.658	1.531		
	4	0	11:54	0.785	0.782	0.727	0.656	1.531		
	8	0	11:58	0.784	0.782	0.727	0.655	1.531	4100	
	16	0	12:06	0.784	0.781	0.726	0.655	1.531		
	32	0	12:18	0.783	0.780	0.725	0.654	1.531		
150	0	0	12:18	0.729	0.737	0.668	0.625	1.563	5050	
	0	30	12:19	0.729	0.737	0.668	0.625	1.563		
	1	0	12:19	0.725	0.735	0.665	0.625	1.563		
	2	0	12:20	0.722	0.732	0.664	0.624	1.563		
	4	0	12:22	0.721	0.731	0.663	0.624	1.563		
	8	0	12:26	0.720	0.730	0.662	0.618	1.563		May have lightly bumped frame for telltale gauge
	16	0	12:34	0.719	.728	0.660	0.618	1.563		
	32	0	12:50	0.718	0.726	0.658	0.618	1.563		
	60	0	13:18	0.717	0.726	0.657	0.616	1.563	4700	Pressure loss
175	0	0	13:19	0.644	0.767	0.588	0.586	1.625	5900	
	0	30	13:19	0.644	0.767	0.588	0.586	1.625		
	1	0	13:20	0.641	0.762	0.584	0.586	1.625		
	2	0	13:21	0.640	0.761	0.583	0.583	1.625		
	4	0	13:23	0.639	0.760	0.582	0.580	1.625		
	8	0	13:27	0.637	0.758	0.580	0.580	1.625		
	16	0	13:35	0.633	0.755	0.577	0.577	1.625	5600	Pressure loss
	32	0	13:51	0.632	0.752	0.574	0.577	1.625		
	60	0	14:19	0.632	0.751	0.573	0.575	1.625	5450	Pressure loss
	90	0	14:49	0.632	0.750	0.571	0.575	1.625		Exceeded 0.01 in/hr, held an addditional 0.5 hr

HALEY ALDRICH	Haley & Aldrich of New York 299 Cherry Hill RD, Suite 303 Parsippany, NJ 07054 Phone: 973-263-3900	**Pile Load Test - Field Data Sheet**	**FILE No:** 40794-100 **PROJECT:** 2065 Walton Ave Development **LOCATION:** Bronx, New York

E INFORMATION

I.D. No.: 49 — Area: 23.8 in^2 — Design Load: 100 tons

Type: STELCOR 5.5" X 0.476W Micropile — Length: 35.2 ft — Jack Calibration: Load = 33 * Pressure + 63

H&A REPS: S. Bruni / N. DeRouchey

DATE: '1-3 December 2015

Target Load (tons)	Elapsed Time (min.)	Elapsed Time (sec.)	Actual Time (hh:mm)	Dial Gauge Readings - Pile Butt: Gauge No. 1 (in.)	Gauge No. 2 (in.)	Gauge No. 3 (in.)	Gauge No. 4 Telltale (in.)	Piano Wire Reading (in)	Applied Load Hydraulic Jack (psi)	Remarks
200	0	0	14:50	0.542	0.568	0.480	0.529	1.719	6750	
	0	30	14:50	0.537	0.562	0.475	0.529	1.719		
	1	0	14:51	0.535	0.561	0.474	0.523	1.719		
	2	0	14:52	0.532	0.559	0.471	0.522	1.719		
	4	0	14:54	0.530	0.557	0.470	0.518	1.719		
	8	0	14:58	0.529	0.555	0.468	0.518	1.719	6500	Pressure loss
	16	0	15:06	0.525	0.552	0.465	0.514	1.719		
	32	0	15:22	0.523	0.549	0.462	0.510	1.719		
	60	0	15:50	0.521	0.546	0.460	0.505	1.719	6300	Pressure loss
200	0	0	15:51	0.496	0.523	0.431	0.493	1.750	7000	Pump topped off
	0	30	15:51	0.496	0.523	0.431	0.493	1.750		
	1	0	15:52	0.492	0.520	0.429	0.492	1.750		
	2	0	15:53	0.491	0.519	0.428	0.492	1.750		
	4	0	15:55	0.490	0.518	0.427	0.490	1.750		
	8	0	15:59	0.489	0.516	0.426	0.488	1.750		
	16	0	16:07	0.486	0.514	0.423	0.486	1.750	6800	
	32	0	16:23	0.484	0.511	0.420	0.481	1.750	6700	Pressure loss
	60	0	16:51	0.482	0.508	0.417	0.477	1.750	6600	Pressure loss
200	0	0	16:52	0.474	0.501	0.409	0.456	1.750	7000	
	1	0	16:53	0.473	0.500	0.408	0.456	1.750		
	2	0	16:54	0.472	0.499	0.408	0.456	1.750		
	4	0	16:56	0.472	0.499	0.408	0.456	1.750		
	8	0	17:00	0.471	0.498	0.406	0.456	1.750		
	16	0	17:08	0.469	0.496	0.406	0.456	1.750	6700	Pressure loss
	32	0	17:24	0.468	0.495	0.402	0.456	1.750	6650	Pressure loss
	60	0	17:52	0.466	0.493	0.402	0.456	1.750	6500	Pressure loss
200	0	0	18:03	0.461	0.488	0.395	0.456	1.750	6900	Pump topped off
	2	0	18:05	0.460	0.487	0.395	0.456	1.750		
	4	0	18:07	0.460	0.486	0.394	0.456	1.750		
	8	0	18:11	.459	0.486	0.393	0.456	1.750		

HALEY ALDRICH	Haley & Aldrich of New York 299 Cherry Hill RD, Suite 303 Parsippany, NJ 07054 Phone: 973-263-3900	**Pile Load Test - Field Data Sheet**	**FILE No:** 40794-100 **PROJECT:** 2065 Walton Ave Development **LOCATION:** Bronx, New York

E INFORMATION

I.D. No.: 49 — Area: 23.8 in^2 — Design Load: 100 tons — **H&A REPS: S. Bruni / N. DeRouchey**

Type: STELCOR 5.5" X 0.476W Micropile — Length: 35.2 ft — Jack Calibration: Load = 33 * Pressure + 63 — **DATE: '1-3 December 2015**

Target Load (tons)	Elapsed Time (min.)	Elapsed Time (sec.)	Actual Time (hh:mm)	Dial Gauge Readings - Pile Butt: Gauge No. 1 (in.)	Gauge No. 2 (in.)	Gauge No. 3 (in.)	Gauge No. 4 Telltale (in.)	Piano Wire Reading (in)	Applied Load Hydraulic Jack (psi)	Remarks
	16	0	18:19	0.458	0.485	0.393	0.456	1.750	6800	
	32	0	18:35	0.457	0.485	0.391	0.456	1.750	6700	Pressure loss
	60	0	19:03	0.456	0.483	0.390	0.456	1.750	6650	Pressure loss
200	0	0	19:03	0.450	0.479	0.384	0.447	1.750	7000	Pump topped off
	1	0	19:04	0.449	0.478	0.383	0.447	1.750		
	2	0	19:05	0.449	0.477	0.382	0.447	1.750		
	4	0	19:07	0.448	0.476	0.381	0.447	1.750		
	8	0	19:11	0.448	0.475	0.381	0.447	1.750		
	16	0	19:27	0.446	0.474	0.378	0.446	1.750	6900	
	32	0	19:43	0.446	0.473	0.378	0.445	1.750	6850	
	60	0	20:00	0.445	0.472	0.378	0.444	1.750	6800	
200	120		21:00	0.442	0.471	0.376	0.442	1.781	6600	Pressure loss
	180		22:00	0.441	0.470	0.375	0.440	1.781	6500	Pressure loss
	240		23:00	0.440	0.469	0.374	0.440	1.781	6400	Pressure loss
	250		23:10	0.440	0.469	0.374	0.440	1.781	6800	Pump topped off
	300		0:00	0.439	0.469	0.374	0.440	1.781	6700	Pressure loss
	360		1:00	0.439	0.469	0.374	0.440	1.781	6550	Pressure loss
	420		2:00	0.438	0.469	0.374	0.440	1.781	6500	Pressure loss
	480		3:00	0.437	0.470	0.374	0.440	1.781	6400	Pressure loss
	490		3:10	0.437	0.470	0.373	0.440	1.781	6800	Pump topped off for last time
	540		4:00	0.436	0.469	0.373	0.440	1.781	6650	Pressure loss
	600		5:00	0.436	0.469	0.373	0.440	1.781	6550	
	660		6:00	0.435	0.469	0.373	0.440	1.781	6500	
	720		7:00	0.435	0.469	0.373	0.440	1.781	6450	
	780		8:00	0.434	0.469	0.373	0.440	1.781	6450	Settlement rate has not exceded 0.012 in over the previous 12 hours
150	0	0	8:00	0.452	0.484	0.391	0.440	1.750	5050	Unload
	0	30	8:01	0.453	0.485	0.391	0.440			
	1	0	8:01	0.453	0.486	0.391	0.440	1.750		
	2	0	8:02	0.453	0.486	0.391	0.440			
	4	0	8:04	0.453	0.486	0.391	0.440	1.750		
	8	0	8:08	0.453	0.486	0.391	0.440			

HALEY ALDRICH
Haley & Aldrich of New York
299 Cherry Hill RD, Suite 303
Parsippany, NJ 07054
Phone: 973-263-3900

Pile Load Test - Field Data Sheet

FILE No: 40794-100
PROJECT: 2065 Walton Ave Development
LOCATION: Bronx, New York

E INFORMATION

I.D. No.: 49
Type: STELCOR 5.5" X 0.476W Micropile

Area: 23.8 in^2
Length: 35.2 ft

Design Load: 100 tons
Jack Calibration: Load = 33 * Pressure + 63

H&A REPS: S. Bruni / N. DeRouchey
DATE: '1-3 December 2015

Target Load (tons)	Elapsed Time (min.)	Elapsed Time (sec.)	Actual Time (hh:mm)	Dial Gauge Readings - Pile Butt: Gauge No. 1 (in.)	Gauge No. 2 (in.)	Gauge No. 3 (in.)	Gauge No. 4 Telltale (in.)	Piano Wire Reading (in)	Applied Load Hydraulic Jack (psi)	Remarks
	16	0	8:16	0.453	0.486	0.391	0.440	1.750		
	32	0	8:32	0.453	0.486	0.391	0.440			
	60	0	9:00	0.453	0.486	0.391	0.440	1.750		
100	0	0	9:00	0.502	0.525	0.437	0.440	1.719	3400	
	0	30	9:01	0.502	0.525	0.437	0.440	1.719		
	1	0	9:01	0.503	0.526	0.437	0.440	1.719		
	2	0	9:02	0.503	0.526	0.437	0.440	1.719		
	4	0	9:04	0.503	0.526	0.438	0.437	1.719		
	8	0	9:08	0.504	0.526	0.439	0.437	1.719		
	16	0	9:16	0.504	0.527	0.439	0.437	1.719		
	32	0	9:32	0.504	0.527	0.439	0.437	1.719		
	60	0	10:00	0.504	0.528	0.440	0.437	1.719		
50	0	0	10:00	0.578	0.584	0.506	0.437	1.719	1750	
	0	30	10:01	0.579	0.584	0.507	0.437	1.719		
	1	0	10:01	0.579	0.584	0.507	0.437	1.719		
	2	0	10:02	0.580	0.585	0.508	0.437	1.719		
	4	0	10:04	0.581	0.585	0.509	0.437	1.719		
	8	0	10:08	0.581	0.586	0.509	0.437	1.719		
	16	0	10:16	0.581	0.586	0.509	0.437	1.719		
	32	0	10:32	0.581	0.586	0.509	0.437	1.719		
	60	0	11:00	0.581	0.586	0.509	0.437	1.719		
0	0	0	11:00	0.695	0.637	0.643	0.456	1.625	0	
	0	30	11:01	0.721	0.661	0.648	0.456	1.625		
	1	0	0:14	0.725	0.663	0.651	0.456	1.625		
	2	0	11:02	0.727	0.665	0.652	0.456	1.625		
	4	0	11:04	0.727	0.665	0.652	0.457	1.625		
	8	0	11:08	0.729	0.666	0.655	0.457	1.625		
	16	0	11:16	0.731	0.669	0.656	0.457	1.625		
	32	0	11:32	0.732	0.670	0.659	0.457	1.625		
	60	0	12:00	0.734	0.670	0.660	0.457	1.625		
	1440	0	12:00	0.744	0.680	0.671	0.465	1.625		Last reading on December 3, 2015

APPENDIX G

Metric Consulting
Axial Compression Load Test Report

Metric

STATIC PILE LOAD TEST (Test Pile)

Project Name:	2065 Walton Avenue, Bronx NY	**Project Location:**	Bronx
	GKC Industries	**Begin Date:**	11/27/2015
Contractor:	Procomm Systems	**End Date:**	11/29/2015
Column Number:	N/A	**Type of Pile:**	Helical Pile
Pile Number:	22	**Jack Serial number**	WB 335
Primary Measuring Devices	Dial Gauge	**Gauge Serial Number:**	WB 988
Auxiliary Measuring Devices:	Plano Wire Mirror Scale	**Design Load:**	100 tons
Repot #:	001-GKC-15	**Inspector:**	Walid Saqer

Jack Gauge Reading (pl)	Pile Load (tons)	% of Design Load	Date	Read time (minutes)	Primary Readings (in)			Average (in.)	Primary Dimensions (in)	Auxiliary Reading (in.)	Auxiliary Dimensions (in.)	Remarks
					A	B	C					
			11/27/2015		0.300	0.400	0.600			3 0/32"		
900	25	25	Increment #1 (900 PSI)									
				1/2	0.505	0.535	0.758	0.599	0.166	3 1/32"	1/32"	8:24 AM
				1	0.505	0.535	0.758	0.599				
				2	0.505	0.535	0.758	0.599				
				4	0.505	0.535	0.758	0.599				
				8	0.505	0.536	0.758	0.599				
				16	0.505	0.536	0.758	0.599				
				32	0.507	0.536	0.758	0.599				
				48	0.507	0.536	0.758	0.6	0.167	3 1/32"	1/32"	
1750	50	50	Increment #2 (1750 PSI)									9:18 AM
				1/2	0.566	0.679	0.789	0.678	0.245	3 2/32"	2/32"	
				1	0.566	0.679	0.789	0.678				
				2	0.566	0.679	0.789	0.678				
				4	0.567	0.68	0.789	0.679				
				8	0.567	0.68	0.79	0.679				
				16	0.567	0.681	0.791	0.680				
				32	0.567	0.681	0.791	0.680	0.247	3 2/32"	2/32"	
2700	75	75	Increment #3 (2700 PSI)									9:50 AM
				1/2	0..596	0.732	0.84	0.723	0.29	3 3/32"	3/32"	
				1	0..596	0.732	0.84	0.723				
				2	0..596	0.732	0.84	0.723				
				4	0..596	0.732	0.84	0.723				
				8	0..596	0.732	0.84	0.723				
				16	0..597	0.734	0.842	0.724				
				32	0..598	0.735	0.843	0.725	0.292	3 3/32"	3/32"	

Reviewed By: Metric Consulting / Sami Hajjar, P.E.

STATE OF NEW YORK
SAMI HAJJAR
074931
LICENSED PROFESSIONAL ENGINEER

Metric Consulting Inspection

STATIC PILE LOAD TEST (Test Pile)

Project Name:	2065 Walton Avenue, Bronx NY	Project Location:	Bronx
	GKC Industries	Begin Date:	11/27/2015
Contractor:	Procomm Systems	End Date:	11/29/2015
Column Number:	N/A	Type of Pile:	Helical Pile
Pile Number:	22	Jack Serial number	WB 335
Primary Measuring Devices	Dial Gauge	Gauge Serial Number:	WB 988
Auxiliary Measuring Devices:	Piano Wire Mirror Scale	Design Load:	100 tons
Report #	001-GKC-15	Inspector:	Walid Saqer

Jack Gauge Reading (psi)	Pile Load (tons)	% of Design Load	Date	Read time (minutes)	Primary Readings (In.) A	B	C	Average (in.)	Primary Dimensions (in.)	Auxiliary Reading (in.)	Auxiliary Dimensions (in.)	Remarks
			11/27/2015									
				Increment #4 (3400 PSI)								
3400	100	100										10:24 AM
				1/2	0.636	0.770	0.886	0.764	0.331	3 4/32"	4/32"	
				1	0.636	0.770	0.886	0.764				
				2	0.637	0.772	0.887	0.765				
				4	0.638	0.773	0.887	0.766				
				8	0.638	0.774	0.888	0.767				
				16	0.638	0.774	0.888	0.767				
				32	0.640	0.776	0.889	0.768				
				60	0.640	0.776	0.889	0.768	0.335	3 4/32"	4/32"	
				Increment #5 (4300 PSI)								
4300	125	125										11:24 AM
				1/2	0.699	0.833	0.946	0.826	0.393	3 6/32"	6/32"	
				1	0.699	0.834	0.946	0.826				
				2	0.700	0.834	0.947	0.827				
				4	0.701	0.835	0.947	0.828				
				8	0.702	0.836	0.948	0.828				
				16	0.702	0.836	0.948	0.828				
				32	0.703	0.837	0.948	0.829				
				60	0.704	0.837	0.948	0.830	0.397	3 6/32"	6/32"	
				Increment #6 (5050 PSI)								
5050	150	150										12:24 PM
				1/2	0.746	0.883	0.992	0.873	0.440	3 7/32"	7/32"	Re Pumped
				1	0.751	0.887	0.997	0.878	0.445			
				2	0.752	0.888	0.997	0.879				
				4	0.752	0.888	0.997	0.879				
				8	0.753	0.890	0.999	0.881				
				16	0.753	0.890	1.001	0.881				
				32	0.754	0.892	1.002	0.883				
				60	0.754	0.893	1.002	0.883	0.450	3 7/32"	7/32"	

Reviewed By: Metric Consulting / Sami Hajjar, P.E.

STATE OF NEW YORK · SAMI H. HAJJAR · 074911 · LICENSED PROFESSIONAL ENGINEER

Metric

STATIC PILE LOAD TEST (Test Pile)

Project Name:	2065 Walton Avenue, Bronx NY	Project Location:	Bronx
	GKC Industries	Begin Date:	11/27/2015
Contractor:	Procomm Systems	End Date:	11/29/2015
Column Number:	N/A	Type of Pile:	Helical Pile
Pile Number:	22	Jack Serial number	WB 335
Primary Measuring Devices	Dial Gauge	Gauge Serial Number:	WB 988
Auxiliary Measuring Devices:	Piano Wire Mirror Scale	Design Load:	100 tons
Report #	001-GKC-15	Inspector:	Walid Saqer

Jack Gauge Reading (pi)	Pile Load (tons)	% of Design Load	Date	Read time (minutes)	Primary Readings (in.) A	B	C	Average (in.)	Primary Dimensions (in.)	Auxiliary Reading (in.)	Auxiliary Dimensions (in.)	Remarks
				Increment #7 (5900 PSI)								
5900	175	175	11/27/2015									1:24 PM
				1/2	0.803	0.946	1.061	0.937	0.504	3 8/32"	8/32"	
				1	0.803	0.946	1.061	0.937				
				2	0.806	0.949	1.062	0.939				
				4	0.806	0.949	1.062	0.939				
				8	0.807	0.949	1.062	0.939				
				16	0.808	0.951	1.064	0.941				
				32	0.810	0.953	1.066	0.937				
				60	0.811	0.954	1.067	0.944	0.511	3 8/32"	8/32"	
				Increment #8 (6800 PSI)								
6800	200	200										2:24 PM
				1/2	0.849	0.994	1.128	0.990	0.557	3 10/32"	10/32"	
				1	0.849	0.994	1.128	0.990				
				2	0.858	1.003	1.130	0.997				Pressure Pumped
				4	0.860	1.005	1.131	0.999				
				8	0.864	1.010	1.133	1.002				
				16	0.869	1.016	1.142	1.009				
				32	0.874	1.020	1.146	1.013				
				60	0.876	1.022	1.148	1.015	0.582	3 12/32"	12/32"	Pressure Pumped
				120	0.881	1.029	1.156	1.022	0.589			Pressure Pumped
				180	0.885	1.033	1.162	1.027	0.594	3 12/32"	12/32"	Pressure Pumped
				12 Hours Holding Period								
				1	0.886	1.034	1.162	1.027	0.594	3 12/32"	12/32"	6:30 PM
				2	0.888	1.035	1.164	1.029	0.596			
				3	0.888	1.036	1.164	1.029	0.596			
				4	0.888	1.036	1.164	1.029				Pump Up the Pressure
				5	0.888	1.036	1.164	1.029				
				6	0.889	1.036	1.164	1.029				Pump Up the Pressure
			11/28/2015	7	0.889	1.036	1.164	1.029				
				8	0.890	1.037	1.165	1.029				
				9	0.890	1.037	1.165	1.029				Pump Up the Pressure
				10	0.890	1.037	1.165	1.029				
				11	0.890	1.037	1.165	1.029				Pump Up the Pressure
				12	0.890	1.037	1.165	1.029	0.598			
				13	0.890	1.037	1.165	1.031				
				14	0.890	1.037	1.165	1.031				

Reviewed By: Metric Consulting / Sami Hajjar, P.E.

STATE OF NEW YORK
SAMI H HAJJAR
#74931
LICENSED PROFESSIONAL ENGINEER

Metric

STATIC PILE LOAD TEST (Test Pile)

Project Name:	2065 Walton Avenue, Bronx NY	Project Location:	Bronx
	GKC Industries	Begin Date:	11/27/2015
Contractor:	Procomm Systems	End Date:	11/29/2015
Column Number:	N/A	Type of Pile:	Helical Pile
Pile Number:	22	Jack Serial number	WB 335
Primary Measuring Devices	Dial Gauge	Gauge Serial Number:	WB 988
Auxiliary Measuring Devices:	Piano Wire Mirror Scale	Design Load:	100 tons
Report #	001-GKC-1S	Inspector:	Walid Saqer

5050	150	150	11/28/2015	Decrement #1 (5050 PSI)								
				1/2	0.878	1.026	1.148	1.017	0.584	3 12/32"	12/32"	8:00 AM
				1	0.878	1.026	1.148	0.850				
				2	0.878	1.026	1.148	0.850				
				4	0.878	1.026	1.148	0.852				
				8	0.878	1.026	1.148	0.852				
				16	0.878	1.026	1.148	0.852				
				32	0.878	1.026	1.148	0.853				
				60	0.878	1.026	1.148	0.854	0.584	3 12/32"	12/32"	
				Decrement #2 (3400 PSI)								
3400	100	100	11/28/2015									9:00 AM
				1/2	0.846	0.996	1.102	0.981	0.548	3 11/32"	11/32"	
				1	0.846	0.996	1.102	0.981				
				2	0.846	0.996	1.102	0.981				
				4	0.846	0.996	1.102	0.981				
				8	0.846	0.996	1.102	0.981				
				16	0.846	0.996	1.102	0.981				
				32	0.846	0.996	1.102	0.981				
				60	0.846	0.996	1.102	0.981	0.548	3 11/32"	11/32"	
				Decrement #3 (1750.00 PSI)								
1750.00	50.00	50.00										10:00 AM
				1/2	0.794	0.940	1.039	0.924	0.491	3 10/32"	10/32"	
				1	0.794	0.940	1.039	0.924				
				2	0.794	0.940	1.039	0.924				
				4	0.794	0.940	1.039	0.924				
				8	0.794	0.940	1.039	0.924				
				16	0.794	0.940	1.039	0.924				
				32	0.791	0.938	1.038	0.922				
				60	0.791	0.938	1.037	0.922	0.489	3 10/32"	10/32"	

Reviewed By: Metric Consulting / Sami Hajjar, P.E.

STATE OF NEW YORK
SAMI H. HAJJAR
074931
LICENSED PROFESSIONAL ENGINEER

Metric Consulting Inspection

STATIC PILE LOAD TEST (Test Pile)

Project Name:	2065 Walton Avenue, Bronx NY	**Project Location:**	Bronx
	GKC Industries	**Begin Date:**	11/27/2015
Contractor:	Procomm Systems	**End Date:**	11/29/2015
Column Number:	N/A	**Type of Pile:**	Helical Pile
Pile Number:	22	**Jack Serial number**	WB 335
Primary Measuring Devices	Dial Gauge	**Gauge Serial Number:**	WB 988
Auxiliary Measuring Devices:	Plano Wire Mirror Scale	**Design Load:**	100 tons
Report #	001-GKC-15	**Inspector:**	Walid Saqer

Jack Gauge Reading (pi)	Pile Load (tons)	% of Design Load	Date	Read time (minutes)	Primary Readings (In.) A	B	C	Average (In.)	Primary Dimensions (in.)	Auxiliary Reading (In.)	Auxiliary Dimensions (in.)	Remarks
				Decrement #4 (0.00 PSI)								
0	0	0	11/28/2015									11:00 AM
				1/2	0.642	0.795	0.812	0.750	0.317	3 8/32"	8/32"	
				1	0.642	0.795	0.812	0.750				
				2	0.642	0.795	0.812	0.750				
				4	0.642	0.795	0.812	0.750				
				8	0.641	0.794	0.811	0.749				
				16	0.640	0.793	0.810	0.748				
				32	0.640	0.790	0.809	0.746				
				60	0.639	0.789	0.807	0.745	0.312	3 8/32"	8/32"	
			11/30/2015									
				24 Hours Rebound Reading								

Reviewed By: Metric Consulting / Sami Hajjar, P.E.

STATE OF NEW YORK
SAMI HAJJAR
079931
LICENSED PROFESSIONAL ENGINEER

APPENDIX H

Haley & Aldrich
Lateral Load Test Results

HALEY ALDRICH	Haley & Aldrich, Inc. 299 Cherry Hill RD, Suite 303 Parsippany, NJ 07054 Phone: 973-263-3900	**Pile Lateral Load Test - Field Data Sheet**	**FILE No:** 40794-100 **PROJECT:** 2065 Walton Ave Development **LOCATION:** Bronx, New York

E INFORMATION

I.D. No.: 22 Area: 23.8 in^2 Design Load: 2 tons **H&A REP: S. BRUNI**

Type: STELLCORE 5.5"x0.476w Micropile Length: 43.5 ft Jack Calibration: Load = 895*Pressure + 46 **DATE: 12/4/2015**

Target Load (tons)	Elapsed Time (min.)	Elapsed Time (sec.)	Actual Time (hh:mm)	Dial Gauge Readings - Pile Butt: Gauge No. 1 (in.)	Gauge No. 2 (in.)	Gauge No. 3 (in.)	Gauge No. (in.)	Reference Beam (in.)	Piano Wire Reading (in)	Applied Load Hydraulic Jack (psi)	Applied Load Load Cell (digits)	Remarks
0.0	0	0	11:10	0.100				18.00	3.000	0		
0.5	0	0	11:10	0.108					3.000	500		
	0	30	11:11	0.108					3.000	500		
	1	0	11:11	0.108					3.000	500		
	2	0	11:12	0.107					3.000	450		
	5	0	11:15	0.108					3.000	500		
	10	0	11:20	0.108				18.00	3.000	500		
1.0	0	0	11:20	0.126					3.031	950		
	0	30	11:21	0.126					3.031	950		
	1	0	11:21	0.126					3.031	950		
	2	0	11:22	0.126					3.031	950		
	5	0	11:25	0.126					3.031	950		
	10	0	11:30	0.126				18.00	3.031	950		
1.5	0	0	11:30	0.143					3.031	1400		
	0	30	11:31	0.143					3.031	1400		
	1	0	11:31	0.142					3.031	1400		
	2	0	11:32	0.142					3.063	1400		
	5	0	11:37	0.142					3.063	1400		
	10	0	11:42	0.143					3.063	1400		
	15	0	11:45	0.143				18.00	3.063	1400		

NOTES: Piano wire reading is on a 1/32 scale, reference beam is on 1/16

HALEY ALDRICH	Haley & Aldrich, Inc. 299 Cherry Hill RD, Suite 303 Parsippany, NJ 07054 Phone: 973-263-3900	**Pile Lateral Load Test - Field Data Sheet**	**FILE No:** 40794-100 **PROJECT:** 2065 Walton Ave Development **LOCATION:** Bronx, New York

E INFORMATION

I.D. No.: 22 Area: 23.8 in^2 Design Load: 2 tons **H&A REP: S. BRUNI**

Type: STELLCORE 5.5"x0.476w Micropile Length: 43.5 ft Jack Calibration: Load = 895*Pressure + 46 **DATE: 12/4/2015**

Target Load (tons)	Elapsed Time (min.)	Elapsed Time (sec.)	Actual Time (hh:mm)	Dial Gauge Readings - Pile Butt: Gauge No. 1 (in.)	Gauge No. 2 (in.)	Gauge No. 3 (in.)	Gauge No. (in.)	Reference Beam (in.)	Piano Wire Reading (in)	Applied Load Hydraulic Jack (psi)	Applied Load Load Cell (digits)	Remarks
2.0	0	0	11:45	0.157					3.063	1850		
	0	30	11:46	0.157					3.063	1850		
	1	0	11:46	0.157					3.063	1850		
	2	0	11:47	0.157					3.063	1850		
	5	0	11:50	0.158					3.063	1850		
	10	0	11:55	0.158					3.063	1850		
	15	0	12:00	0.158					3.063	1850		
	20	0	12:05	0.158				18.00	3.063	1850		
2.5	0	0	12:05	0.173					3.094	2300		
	0	30	12:06	0.174					3.094	2300		
	1	0	12:06	0.174					3.094	2300		
	2	0	12:07	0.175					3.094	2300		
	5	0	12:10	0.175					3.094	2300		
	10	0	12:15	0.175					3.094	2300		
	15	0	12:20	0.175					3.094	2300		
	20	0	12:25	0.175				18.00	3.094	2300		
3.0	0	0	12:25	0.188					3.094	2750		
	0	30	12:26	0.188					3.094	2750		
	1	0	12:26	0.188					3.094	2750		
	2	0	12:27	0.189					3.094	2750		
	5	0	12:30	0.189					3.094	2750		
	10	0	12:35	0.190					3.094	2750		
	15	0	12:40	0.190					3.094	2750		
	20	0	12:45	0.190				18.00	3.094	2750		

NOTES: Piano wire reading is on a 1/32 scale, reference beam is on 1/16

HALEY ALDRICH
Haley & Aldrich, Inc.
299 Cherry Hill RD, Suite 303
Parsippany, NJ 07054
Phone: 973-263-3900

Pile Lateral Load Test - Field Data Sheet

FILE No: 40794-100
PROJECT: 2065 Walton Ave Development
LOCATION: Bronx, New York

E INFORMATION

I.D. No.: 22 Area: 23.8 in^2 Design Load: 2 tons
Type: STELLCORE 5.5"x0.476w Micropile Length: 43.5 ft Jack Calibration: Load = 895*Pressure + 46

H&A REP: S. BRUNI
DATE: 12/4/2015

Target Load (tons)	Elapsed Time (min.)	Elapsed Time (sec.)	Actual Time (hh:mm)	Dial Gauge Readings - Pile Butt: Gauge No. 1 (in.)	Gauge No. 2 (in.)	Gauge No. 3 (in.)	Gauge No. (in.)	Reference Beam (in.)	Piano Wire Reading (in)	Applied Load Hydraulic Jack (psi)	Applied Load Load Cell (digits)	Remarks
3.4	0	0	12:45	0.199					3.125	3100		
	0	30	12:46	0.200					3.125	3100		
	1	0	12:46	0.200					3.125	3100		
	2	0	12:47	0.200					3.125	3100		
	5	0	12:50	0.201					3.125	3100		
	10	0	12:55	0.201					3.125	3100		
	15	0	13:00	0.201					3.125	3100		
	20	0	13:05	0.201				18.00	3.125	3100		
3.6	0	0	13:05	0.208					3.125	3300		
	0	30	13:06	0.209					3.125	3300		
	1	0	13:06	0.209					3.125	3300		
	2	0	13:07	0.210					3.125	3300		
	5	0	13:10	0.211					3.125	3300		
	10	0	13:15	0.211					3.125	3300		
	15	0	13:20	0.211					3.125	3300		
	20	0	13:25	0.211				18.00	3.125	3300		
3.8	0	0	13:25	0.214					3.125	3500		
	0	30	13:26	0.215					3.125	3500		
	1	0	13:26	0.215					3.125	3500		
	2	0	13:27	0.215					3.125	3500		
	5	0	13:30	0.216					3.125	3500		
	10	0	13:35	0.216					3.125	3500		
	15	0	13:40	0.216					3.125	3500		
	20	0	13:45	0.217				18.00	3.125	3500		

NOTES: Piano wire reading is on a 1/32 scale, reference beam is on 1/16

HALEY ALDRICH
Haley & Aldrich, Inc.
299 Cherry Hill RD, Suite 303
Parsippany, NJ 07054
Phone: 973-263-3900

Pile Lateral Load Test - Field Data Sheet

FILE No: 40794-100
PROJECT: 2065 Walton Ave Development
LOCATION: Bronx, New York

E INFORMATION

I.D. No.: 22 | Area: 23.8 in^2 | Design Load: 2 tons | **H&A REP: S. BRUNI**

Type: STELLCORE 5.5"x0.476w Micropile | Length: 43.5 ft | Jack Calibration: Load = 895*Pressure + 46 | **DATE: 12/4/2015**

Target Load (tons)	Elapsed Time (min.)	Elapsed Time (sec.)	Actual Time (hh:mm)	Dial Gauge Readings - Pile Butt: Gauge No. 1 (in.)	Gauge No. 2 (in.)	Gauge No. 3 (in.)	Gauge No. (in.)	Reference Beam (in.)	Piano Wire Reading (in)	Applied Load Hydraulic Jack (psi)	Applied Load Load Cell (digits)	Remarks
4.0	0	0	13:45	0.224					3.156	3800		
	0	30	13:46	0.224					3.156	3800		
	1	0	13:46	0.225					3.156	3800		
	2	0	13:47	0.225					3.156	3800		
	5	0	13:52	0.226					3.156	3800		
	10	0	13:55	0.226					3.156	3800		
	15	0	14:00	0.226					3.156	3800		
	20	0	14:05	0.226					3.156	3800		
	30	0	14:15	0.226					3.156	3800		
	45	0	14:30	0.227					3.156	3800		
	60	0	14:45	0.227				18.00	3.156	3800		
3.0	0	0	14:45	0.221					3.125	2750		
	0	30	14:46	0.221					3.125	2750		
	1	0	14:46	0.221					3.125	2750		
	2	0	14:47	0.221					3.125	2750		
	5	0	14:50	0.221					3.125	2750		
	10	0	14:55	0.221				18.00	3.125	2750		
2.0	0	0	14:55	0.203					3.125	1850		
	0	30	14:56	0.203					3.125	1850		
	1	0	14:56	0.203					3.125	1850		
	2	0	14:57	0.203					3.125	1850		
	5	0	15:00	0.203					3.125	1850		
	10	0	15:05	0.203				18.00	3.125	1850		

NOTES: Piano wire reading is on a 1/32 scale, reference beam is on 1/16

HALEY ALDRICH
Haley & Aldrich, Inc.
299 Cherry Hill RD, Suite 303
Parsippany, NJ 07054
Phone: 973-263-3900

Pile Lateral Load Test - Field Data Sheet

FILE No: 40794-100
PROJECT: 2065 Walton Ave Development
LOCATION: Bronx, New York

E INFORMATION

I.D. No.: 22 | Area: 23.8 in^2 | Design Load: 2 tons | **H&A REP: S. BRUNI**

Type: STELLCORE 5.5"x0.476w Micropile | Length: 43.5 ft | Jack Calibration: Load = 895*Pressure + 46 | **DATE: 12/4/2015**

Target Load (tons)	Elapsed Time (min.)	Elapsed Time (sec.)	Actual Time (hh:mm)	Dial Gauge Readings - Pile Butt: Gauge No. 1 (in.)	Gauge No. 2 (in.)	Gauge No. 3 (in.)	Gauge No. (in.)	Reference Beam (in.)	Piano Wire Reading (in)	Applied Load Hydraulic Jack (psi)	Applied Load Load Cell (digits)	Remarks
1.00	0	0	15:05	0.166					3.094	950		
	0	30	15:06	0.166					3.094	950		
	1	0	15:06	0.166					3.063	950		
	2	0	15:07	0.165					3.063	950		
	5	0	15:10	0.165					3.063	950		
	10	0	15:15	0.165				18.00	3.063	950		
0.00	0	0	15:15	0.121					3.000	100		Target 0 psi, approximately 100p psi
	0	30	15:16	0.118					3.000	100		left in pump
	1	0	15:16	0.116					3.000	100		
	2	0	15:17	0.115					3.000	50		
	5	0	15:20	0.115					3.000	0		
	10	0	15:25	0.114					3.000	0		Pump fell off pile
	15	0	15:30	0.113					3.000	0		
	30	0	15:45	0.112					3.000	0		
	45	0	16:00	0.112					3.000	0		
	60	0	16:15	0.112				18.00	3.000	0		

NOTES: Piano wire reading is on a 1/32 scale, reference beam is on 1/16